pizzato

2025-2026

General Catalogue - PLCs & Safety Modules

Index General Catalogue - PLCs & Safety Modules

1 Company Profile

▶ 3

1 New products

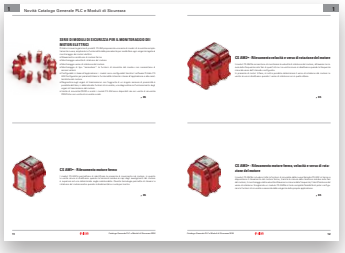

▶ 11

2 Single-function safety modules

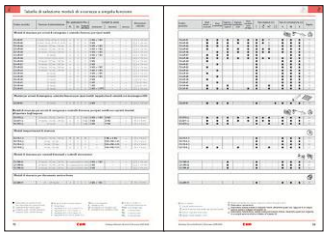

Section index

▶ 13

2A For emergency stops and movable guard monitoring CS AR series

▶ 19

2B For emergency stops, monitoring of movable guards, safety mats and safety bumpers with 4-wire technology CS AR series

▶ 43

2C For emergency stops and movable guard monitoring with delayed contacts CS AT series

▶ 45

2D Safety timers CS FS series

▶ 51

2E For two-hand controls or synchronism monitoring CS DM series

▶ 59

2F For motor standstill, speed and motor-direction-of-rotation monitoring, CS AM series

▶ 65

2G Expansion modules with output contacts CS ME series

▶ 75

3 Multifunction safety modules

GEMNIS

3A Programmable multifunction modules CS MP series

▶ 89

3B Pre-programmed multifunction modules CS MF series

▶ 121

4 Appendix

Utilization requirements ▶ 133
Introduction to safety engineering ▶ 139
Technical definitions ▶ 165
General terms and conditions of sale ▶ 170

Other catalogues available

General Catalogue
Detection

General Catalogue
Safety Devices

General Catalogue
HMI

General Catalogue
Lift

MORE THAN 400 PROFESSIONALS WITH PASSION

It is people, with their professionalism and dedication that make a great company. This profound conviction has always guided Pizzato Elettrica in their choice of employees and partners.

Today, Giuseppe and Marco Pizzato lead a tireless team providing the fastest and most efficient response to the demands of the market. This team has grown over the last 10 years and has achieved a considerable increase in sales in all the countries where Pizzato Elettrica is present.

The various strategic sectors of the business are headed by professionals with significant experience and expertise. Many of these people have developed over years with the company.

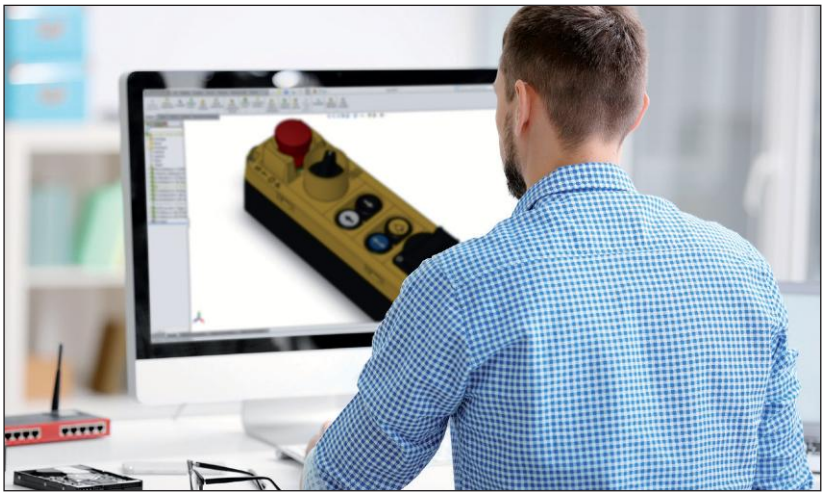

Others are experts in their specific field and have integrated personal experience with the Pizzato Elettrica ethos to extend the company's capability and knowledge.

From the design office to the technical assistance department, from managers to workers, every employee believes in the company and its future. Pizzato Elettrica employees all give the best of themselves secure in the knowledge they are the fundamental elements of a highly valuable enterprise.

PASSION FOR QUALITY

Pizzato Elettrica is one of the leading European manufacturers of position switches, microswitches, safety devices, safety modules, foot switches, control and signalling devices, and devices for lifts. An entrepreneurial company such as Pizzato Elettrica bases its foundations on a solid and widely shared value system. The pillars that form the basis of the company's work have remained constant, and constitute the fundamental guiding principles for all company activities.

PASSION FOR QUALITY

Passion for product quality, orientation towards excellence, innovation, and continuous development, represent the key principles of Pizzato Elettrica's everyday work.
Anyone using Pizzato Elettrica's products does so in the certainty that these devices are of certified quality, since they are the result of a process that is scrupulously controlled at every stage of the production.
The company's goal is to offer the market safe, reliable, and innovative solutions.

CARE FOR THE CUSTOMER

In order to be successful, a product must respond to the specific needs of those who will use it. Market developments must be carefully monitored in order to understand, in advance, which new applications will prove themselves truly useful. This is why Pizzato Elettrica has always cultivated close synergies with the companies that have chosen it as a supplier, using this continuous dialogue to identify the potential developments of the own product range in order to make it highly flexible, complete and capable to respond to the most diverse needs.

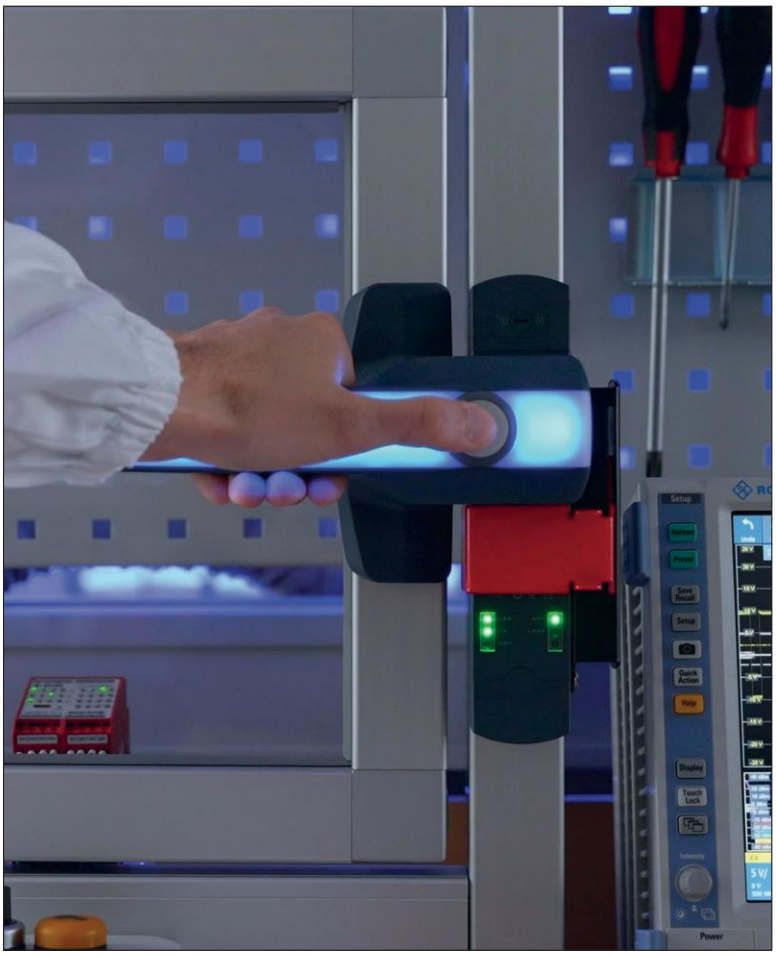

1984: AN ENTREPRENEURIAL STORY BEGINS

1984 The company Pizzato di Pizzato B. & C. snc. manufacturer of position switches is founded.

1988 The company becomes a limited liability partnership, and is renamed Pizzato Elettrica, a brand shortly destined to become renowned and valued nationwide.
The first company-owned plant (P1) geared towards mechanical processing was built.

1990 By the end of the decade, thanks to the development of quality products and the experience built on the Italian market, Pizzato Elettrica turns to the international market.

1995 Building of the second plant (P3) geared towards the moulding of plastic materials. Development of the position switch range continues in parallel. Start of significant years in terms of safety devices planning. The safety sector becomes a key sector to the company.

1998 Construction of the third plant (P4), housing the assembly department.

2002 Achievement of the ISO 9001:2000 certification. Launching of the first safety modules. The new factory headquarters and logistics centre (P5) is built and will remain the company's headquarters for many years. Continued expansion of the industrial safety and automation product range.

2007 Pizzato Elettrica faces its first generational change: Giuseppe and Marco Pizzato take over the company directorship.

2010 Extension of Pizzato Elettrica product portfolio, with the launch of the innovative EROUND line consisting of control and signalling devices. This product range accompanies position switches and safety devices, thus offering complete solutions to customers.

2012 Introduction of Gemnis Studio, the first software produced by Pizzato Elettrica. A graphic development environment for the creation, simulation, and debugging of programs that can be integrated in the Gemnis line modules.

2013 Foundation of first subsidiary of Pizzato Elettrica, Pizzato Deutschland GmbH, in Germany.

2014 A new production facility (P8) dedicated to switches and automatic machines is opened, spanning a surface area of 6000 m².

2016 The new NS series of safety switches with electromagnets and RFID technology is introduced, fruit of the company's experience, spanning more than thirty years in the field of industrial safety. To date it is the state of the art in its industry.
Foundation of second subsidiary of Pizzato Elettrica, Pizzato France SARL, in France.

2017 The company continues to expand and achieves the quality certification based on the more recent version of standard ISO 9001 of 2015.
In Spain, the third Pizzato Elettrica subsidiary is founded: Pizzato Iberica SL.
The foundation stone is laid for the new factory (P6), which is to become the company's headquarters.

2018 The safety handle P-KUBE Krome is launched, a brand new product in the market, confirming that Pizzato Elettrica thrives on innovation in the sectors of automation and industrial safety.
Foundation of fourth subsidiary of Pizzato Elettrica, Pizzato USA Inc, in the United States.

2019 The new factory (P6) is opened, a modern building of 28,000 m² realized with the most advanced Industry 4.0 technologies, where all offices and production divisions are transferred, allowing to further improve the flow of material and information.
The logistics and shipment department is optimised with the introduction of a new completely automated warehouse.

2021 Pizzato Elettrica India Ltd. and Pizzato Korea Ltd., commercial branches of Pizzato Elettrica, are established in India and South Korea, respectively.

2022 Foundation of Pizzato Academy, Pizzato Elettrica's new training site for getting better acquainted with our products and following the constant regulatory developments in the sector.

2023 Pizzato Shanghai Trading Co. Ltd. is founded, as the seventh subsidiary of Pizzato Elettrica, based in China. Pizzato Academy training adds classroom courses focused on Gemnis Studio software to its existing webinars. The SPS – Smart Production Solutions trade fair in Nuremberg is the launchpad for the revolutionary NX series of RFID safety locking switches, the smallest in the world.

2024 Pizzato UK Ltd. is established in the United Kingdom, as the eighth branch of Pizzato Elettrica.

Today, Giuseppe and Marco Pizzato lead a company in constant growth in terms of new product launches, number of employees, turnover, and new markets. Pizzato Elettrica is continuing its new product internationalisation and development process.

MORE THAN 100 MILLION PARTS SOLD WORLDWIDE

Pizzato Elettrica's product catalogue contains more than 10,000 articles, with more than 1,500 special codes developed for devices personalised according to clients' specific needs.
Pizzato Elettrica devices can be grouped, according to typology, into three main macro-categories.

POSITION SWITCHES

Pizzato Elettrica position switches are daily installed in every type of industrial machinery all over the world for applications in the sector of wood, metal, plastic, automotive, packaging, lifting, medicinal, naval, etc.
In order to be used in a such wide variety of sectors and countries, Pizzato Elettrica position switches are made to be assembled in a lot of configurations thanks to the various body shapes, dozens of contact blocks, hundreds of actuators and materials, forces, assembling versions.
Pizzato Elettrica can offer one of the widest product range of position switches in the world. Moreover, the use of high quality materials, high reliability technologies (e.g. twin bridge contact blocks) as well as the IP67 protection degree make this range of position switches one of the most technologically evolved.

SAFETY DEVICES

The company Pizzato Elettrica has been one of the first Italian companies developing dedicated items for this sector, creating and patenting dozens of innovative products, thus becoming one of the main European manufacturers of safety devices.
The wide range of specific products for the safety of machinery, entirely designed and assembled in the company's Marostica (VI) premises, includes the more traditional safety switches with separate actuator (with or without locking mechanism) and hinge switches, but also the state-of-the-art devices with anti-tamper RFID technology such as the ST series sensors and the NG, NS and NX series locking devices.
The product range is completed by safety handles for guards, including the innovative P-KUBE Krome model, featuring an illuminated grip with multicolour signalling LED. It also includes the CS series safety modules, available in single-function version or user-programmable via the Gemnis Studio software — fully developed by Pizzato Elettrica and distributed under a free licence — along with the BC series passive distribution box and the P-Connect connection gateway. The range of ES series housings with control devices now includes new ES series housings with illuminated guard and buzzer, while the control device units of the BN series are now available also with IO-Link technology.

MAN-MACHINE INTERFACE

Pizzato Elettrica's control and signalling devices of the EROUND line are designed for the use in the human-machine interface sector. Thanks to the elegant design, the care for details and the elegance of the product combined with its maximum safety and reliability, this series is one of the most complete and cutting-edge on the market.

In order to satisfy its customers' needs and requests, Pizzato Elettrica offers a lot of accessories purposely designed to complement its wide range of products and for the installation of these devices on machinery.

MILLIONS OF CERTIFIED PRODUCT CODES

A simple brand isn't enough: the company is aiming for the Pizzato Elettrica brand to be widely recognised as a synonym for absolute quality and certainty.

A result that has been reached and consolidated over the years, updating and expanding the series of certifications obtained from the most important Italian and international control organisations. Product quality is verified by certification bodies issuing a range of quality marks: IMQ, UL, CCC, TÜV SÜD, EAC. These bodies lay out high technical and qualitative standards for the company to achieve and maintain, verified yearly with several inspections: these are performed, without prior notice, by qualified inspectors, who extract samples of products and materials destined for sale from plants, or from the market directly, to subject them to apposite tests.

- CE MARK. All Pizzato Elettrica products bear the CE marking in conformity with the European Directives in force.
- UKCA MARK. All Pizzato Elettrica products bear the UKCA marking in conformity with the United Kingdom directives in force.
- ISO 9001 CERTIFICATION. The company's production system is compliant with the international ISO 9001 standard, in its most recent 2015 revision. The certification covers all of the company's plants and their production and managerial activities: entry checks, technical, purchasing and commercial department activities, manufacturing operations assessments, final pre-shipping product tests and checks, equipment reviews and the management of the metrological lab.
  The Pizzato Elettrica quality management system ensures that all sensitive company processes – from component design to implementation, from materials provisioning to verification of non-compliant products – are carried out according to the procedures laid down, with the aim of providing our customers with continuously improved and reliable products.
- CERTIFICATION OF COMPANY QUALITY SYSTEMS. Pizzato Elettrica has obtained the certificate of compliance with the UNI EN ISO 9000 regulations in force in Italy and abroad. It is issued by a recognised independent body that guarantees the quality and reliability of the service offered to clients worldwide.
- CSQ, CISQ AND IQNET. The CSQ system is part of the CISQ (Italian Certification of Quality Systems) federation, which consists of the primary certification bodies operating in Italy in the various product sectors. CISQ is the Italian representative body within IQNet, the biggest international Quality Systems and Company Management certification network, which is adhered to by 25 certification organs in as many countries.

GLOBAL SUBSIDIARIES

Pizzato Deutschland GmbH
Munich
Founding year: 2013
info@pizzato.com

Pizzato France Sarl
Villeurbanne - Lyon
Founding year: 2016
info@pizzato.com

Pizzato Iberica SL
Barcelona
Founding year: 2017
info@pizzato.com

Pizzato USA
East Syracuse, NY
Founding year: 2018
info.usa@pizzato.com

Pizzato Elettrica India Ltd.
Pune
Founding year: 2021
info@pizzato.com

Pizzato Korea Ltd.
Seoul
Founding year: 2021
info@pizzato.com

Pizzato Shanghai Trading Co.Ltd.
Shanghai
Founding year: 2023
info@pizzato.com

Pizzato UK Ltd.
London
Founding year: 2024
info@pizzato.com

The purpose of these subsidiaries is to coordinate and support the activities of representative agencies, or distributors, present in the various countries, managing marketing and sales activities, with further objectives of increasing brand visibility and penetration capacity of Pizzato Elettrica products in markets considered strategic.

Products from Pizzato Elettrica are currently used in over 80 countries: The commercial support network, which is made up of local professional and experienced representatives, combined with the productive capacity of the headquarters in Italy, are the basis for the formation of a group that, together with its partners, has all the necessary requirements to become one of the most important companies in the field of automation and industrial safety.

TECHNICAL AND SALES ASSISTANCE

TECHNICAL DEPARTMENT

The Pizzato Elettrica technical department provides direct technical and qualified assistance in Italian and English, helping in this way the customers to choose the suitable product for their own application explaining the characteristics and the correct installation.

Office hours: Monday to Friday
08:00 am - 12:30 pm / 01:30 pm - 05:00 pm CET
Telephone: +39.0424.470.930
E-mail: tech@pizzato.com

Spoken languages:

SALES DEPARTMENT

Among the strengths in the company relationship with the commercial network, the direct assistance guaranteed in five languages: Italian, English, French, German and Spanish. A service that confirms Pizzato Elettrica quality and attention to the needs of customers from around the world.

Office hours: Monday to Friday
08:00 am - 12:30 pm / 01:30 pm - 05:00 pm CET
Telephone: +39.0424.470.930
E-mail: info@pizzato.com

Spoken languages:

TRADE FAIRS AND EVENTS

TRADE FAIRS
Pizzato Elettrica regularly participate to many trade fairs in Italy and abroad, presenting in this way to the market the products, the latest news, etc.

EVENTS
Besides offering qualified technical assistance, Pizzato Elettrica presents itself as a dynamic partner who is attentive to the needs of its customers. For this reason, the company organises several meetings and training courses with particular attention to the regulatory aspect of machinery safety.

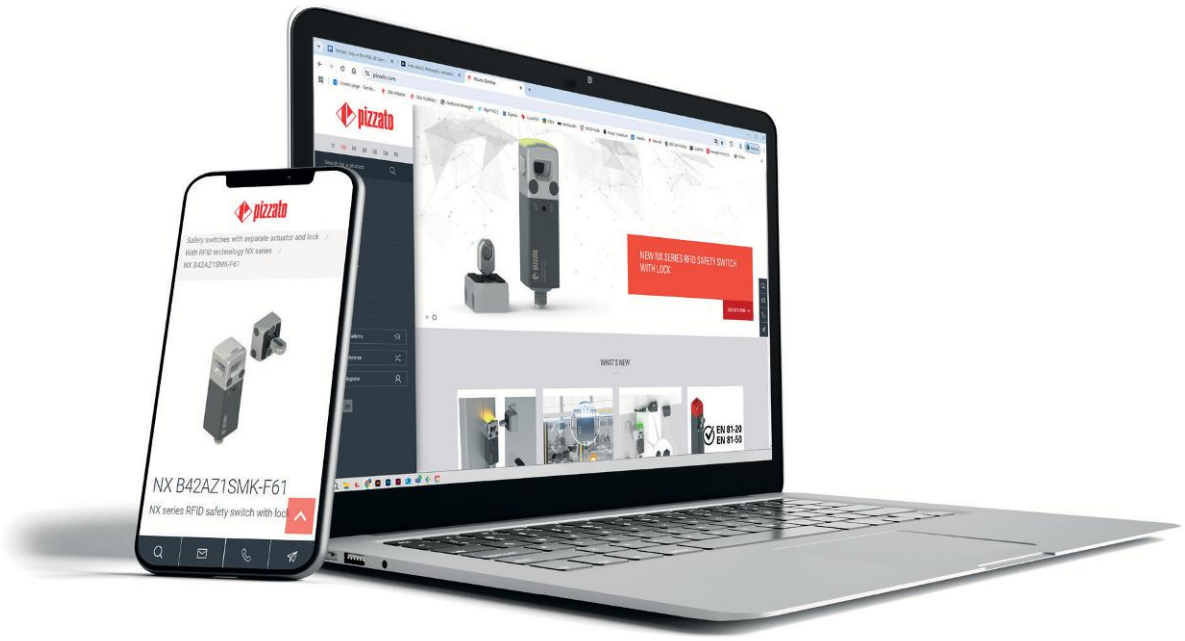

WEBSITE WWW.PIZZATO.COM

PRODUCT NEWS
Visit the website at www.pizzato.com to stay updated on all the news regarding product launches, to view the entire range of products created by Pizzato Elettrica, and to consult all the documentation provided.

SEARCH USING FILTERS
You can find the product you want by entering the relative item code, or use the filters provided to create the item most adapted to your particular requirements, by choosing the features it needs to offer.

BROWSABLE, DOWNLOADABLE CATALOGUE
Users can download the complete catalogue or alternatively browse it directly online, an extremely handy solution for those wishing to consult the range of products simply and rapidly.

HIGH RESOLUTION IMAGES
The information provided for each product is complete with high resolution images to offer visitors to the website a clear, accurate view of the items in close detail, also offering them the possibility to zoom in and out on the image.

USAGE INSTRUCTIONS
You can download product usage or installation instructions, in PDF format, to your computer.

2D AND 3D FILES
2D and 3D drawings are available for every item; in formats that are compatible with the widest variety of drawing programs.

CERTIFICATES
The latest product type approval certificates, and EC declarations of conformity in accordance with applicable European product directives, are published on the website.

VIDEO GALLERY
The large video section of the website is capable of showcasing the main characteristics, functions and use of the various products.

MULTILINGUAL TRANSLATIONS
The website's multilingual versions allow the clients of the global market to find all the information they need in one place.

WEBINARS
The webinars from Pizzato Elettrica go into detail in the area of machine safety with focus on the further development of standards. The speakers are experts with targeted specialisation and detailed knowledge of standards and directives in the industry.

CROSS-REFERENCE
It is possible to find a Pizzato Elettrica product as an alternative to others on the market in terms of functionality.

SERIES OF SAFETY MODULES FOR MONITORING ELECTRIC MOTORS.

Pizzato updates its CS AM product range with a series of brand new safety modules, introducing new functionality to meet any electric-motor monitoring requirements.

- Motor standstill-state detection
- Motor speed-of-rotation monitoring
- Motor direction-of-rotation monitoring
- Sensorless monitoring: module safety functions do not require external sensors
- Application-specific configuration: modules can be configured using Pizzato CS AM Configurator software to set up the functions required for the specific application and characteristics of the motor.
- Transmission-component diagnostics: with the addition of a single proximity sensor, it is possible to enable diagnostics for operation of motor transmission components, alongside safety functions.
- OSSD or relay safety outputs: CS AM modules are available with OSSD or relay safety outputs.

▸ 65

CS AM1• - Detection of motor standstill

CS AM1• modules enable detection of movement in motor, with safety outputs deactivating when the residual voltage at the ends of the motor windings is above a selected threshold. This technology enables detection of motor rotation even when it is not powered and turning due to inertia.

▸ 65

CS AM2• - Monitoring of motor speed and direction of rotation

CS AM2• modules enable monitoring of motor speed of rotation by measuring the frequency on its phases. The safety outputs deactivate when the frequency measured falls outside the set range.

With a three-phase motor, it is also possible to detect the direction of rotation of the motor: the safety outputs deactivate when the direction of rotation is not as expected.

▸ 65

CS AM3• - Monitoring of motor standstill, speed and direction of rotation

CS AM3• modules include all the safety functions of the new CS AM family: detection of motor standstill by measuring the residual voltage on motor phases, monitoring of motor speed via frequency measurement and identification of motor direction of rotation. CS AM3• modules provide the user with complete flexibility to configure safety functions according to the specific requirements of the application.

▸ 65

Selection diagram

SAFETY FUNCTION AND OUTPUT CONTACTS

For emergency stops and end position monitoring for movable guards

CS AR

01	2NO + 1NC	**22**	3NO + 1NC
02	3NO	**23**	3NO + 1NC
04	3NO + 1NC	**24**	4NO + 1NC
05	3NO + 1NC	**25**	4NO + 1NC
06	3NO + 1NC	**40**	2NO
07	4NO + 1NC	**41**	2NO
08	2NO	**46**	1NO
20	2NO	**91**	2NO + 1OPT
21	2NO		

For emergency stops, end position monitoring for movable guards, safety mats and safety bumpers with 4-wire technology

CS AR-51

51	2NO

For emergency stops and end position monitoring for movable guards with delayed contacts upon opening of the inputs

CS AT

0•	2NO + 1NC (instantaneous) 2NO (delayed)
1•	3NO (instantaneous) 2NO (delayed)
3•	2NO (instantaneous) 1NO (delayed)

Safety timer modules

CS FS

1•	1NO + 2NC
2•	1NO + 1NC + 1CO
3•	1NO + 1NC + 1CO
5•	1NO + 1NC + 1CO

For two-hand controls or synchronism monitoring

CS DM

01	3NO + 1NC
02	2NO
20	2NO

For motor standstill, speed and motor-direction-of-rotation monitoring

CS AM

11	2 OSSD
12	3NO
14	2NO + 1NC
21	2 OSSD
22	3NO
23	3NO+ 3NO
31	2 OSSD
33	3NO+ 3NO

Expansion modules

CS ME

01	5NO + 1NC (instantaneous) 1NC (feedback)
02	4NO + 2NC (instantaneous) 1NC (feedback)
03	3NO (instantaneous) 1NC (feedback)
20	4NO + 2NC (delayed) 1NC (feedback)
31	4NO + 2NC (delayed) 1NC (feedback)

CONNECTION

V
Screw terminals

M
Connector with screw terminals

X
Connector with spring terminals

SUPPLY VOLTAGE

12 V DC	24 V DC	24 V AC/DC	10...30 V DC	120 V AC	230 V AC
U12	**U24**	**024**	**E02**	**120**	**230**

Introduction

With more than 20 years of experience in the field of safety and industrial automation, Pizzato Elettrica offers the safety modules of the CS series, made for the main safety functions present in industrial machinery.

All CS series safety modules are implemented with cutting edge technology, and attention to detail.

They are produced on the premises of Pizzato Elettrica, at Marostica (in Italy), using special SMT (surface mount technology) assembly lines that are able to operate with lead-free technology. This meets eco-compatibility requirements laid down by the RAEE and RoHS Directives.

Mounting on DIN rails

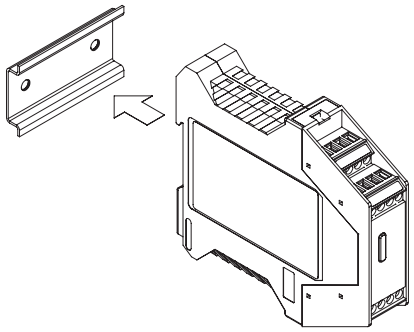

The housings of all CS series safety modules are suitable for DIN rail mounting and are compact (22.5 or 45 mm wide) to minimize the overall dimensions inside the control cabinets.

Fast wiring with removable connectors

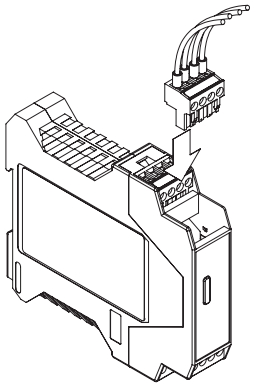

The CS series safety modules can be ordered as versions with screw terminals, or with removable connectors and screw or spring terminals.

The versions with removable connectors are faster and easier to wire and install.

Furthermore, should a damaged module require replacement, machine down-times are significantly reduced.

EC-type examination certificate

CE 0051

The EC-type examination certificate is issued by a Notified Body, and guarantees compliance with the safety requirements of the Machinery Directive. The EC-type examination certificate guarantees to the customer, that experts of a Notified Body have verified compliance with directives and continuously monitor the production process and check the conformity of products with the sample (type) verified during approval. A product that is awarded EC-type certification can be marketed with the CE symbol, followed by a four-digit number identifying the Notified Body.

Final inspection of 100% of all products

To provide the user with a guarantee of the high quality standards of Pizzato Elettrica products, each safety module is tested individually using automated test stations, and identified by a unique serial number.

This process allows preventive identification of products displaying production defects, or deviations from standard operating parameters.

Quality marks

All Pizzato Elettrica safety modules bear quality marks that confirm their fulfilment of safety requirements and compliance with product directives in force in international markets.

Technical assistance

The technical department of Pizzato Elettrica supports installers of CS series safety modules with useful information before, during, and after the installation phase, in the most complex applications.

Code structure

Attention! The feasibility of a code number does not mean the effective availability of a product. Please contact our sales office.

CS AR-01V024

Safety function	
AR	For emergency stops and end position monitoring for movable guards
AT	For emergency stops and end position monitoring for movable guards with delayed contacts upon opening of the inputs
FS	Safety timer modules
DM	For two-hand controls or synchronism monitoring
ME	Expansion modules

Connection type	
V	Screw terminals
M	Connector with screw terminals
X	Connector with spring terminals

Supply voltage	
U12	12 Vdc
U24	24 Vdc
024	24 Vac/dc
E02	10 ... 30 Vdc
120	120 Vac
230	230 Vac

The code structure for CS AM●● modules is detailed on page 66

Selection table for safety modules with single function

Product code	Supply voltage						For applications up to			Output contacts		
	U12	U24	024	E02	120	230	PL	SIL	Safety category	instantaneous	delayed	feedback
Safety modules for emergency stops and end position monitoring for movable guards												
CS AR-01	-	-	■	■	■	■	e	3	4	**2 NO + 1 NC**	-	-
CS AR-02	-	-	■	■	■	■	e	3	4	**3 NO**	-	-
CS AR-04	-	-	■	-	■	■	e	3	4	**3 NO + 1 NC**	-	-
CS AR-05	-	-	■	-	■	■	e	3	4	**3 NO + 1 NC**	-	-
CS AR-06	-	-	■	-	■	■	e	3	4	**3 NO + 1 NC**	-	-
CS AR-07 ④	-	-	■	-	-	-	e	3	4	**4 NO + 1 NC**	-	-
CS AR-08	■	-	■	-	■	■	e	3	4	**2 NO**	-	-
CS AR-20	-	-	■	-	■	■	e	3	3	**2 NO**	-	-
CS AR-21	-	-	■	-	■	■	e	3	3	**2 NO**	-	-
CS AR-22	-	-	■	-	■	■	e	3	3	**3 NO + 1 NC**	-	-
CS AR-23	-	-	■	-	■	■	e	3	3	**3 NO + 1 NC**	-	-
CS AR-24	-	-	■	-	-	-	e	3	3	**4 NO + 1 NC**	-	-
CS AR-25	-	-	■	-	-	-	e	3	3	**4 NO + 1 NC**	-	-
CS AR-40	-	-	■	-	-	-	d	2	2	**2 NO**	-	-
CS AR-41	-	-	■	-	-	-	d	2	2	**2 NO**	-	-
CS AR-46	-	-	■	-	-	-	c	1	1	**1 NO**	-	-
CS AR-91	-	-	■	-	-	-	e	3	4	**2 NO + 1 OPT**	-	-
Module for emergency stops, end position monitoring for movable guards, safety mats and safety bumpers with 4-wire technology												
CS AR-51	-	-	■	-	-	-	e	3	4	**2 NO**	-	-
Safety modules for emergency stop and end position monitoring for movable guards with delayed contacts upon opening of the inputs												
CS AT-0 ③	-	-	■	-	■	■	e	3	②	**2 NO + 1 NC**	**2 NO**	-
CS AT-1 ③	-	-	■	-	■	■	e	3	②	**3 NO**	**2 NO**	-
CS AT-3 ③	-	-	■	-	-	-	e	3	②	**2 NO**	**1 NO**	-
Safety timer modules												
CS FS-1 ③	-	-	■	-	■	■	①	①	①	-	**1 NO + 2 NC**	-
CS FS-2 ③	-	■	-	-	■	-	d	2	3	-	**1 NO +1 NC +1 CO**	-
CS FS-3 ③	-	■	-	-	■	-	d	2	3	-	**1 NO +1 NC +1 CO**	-
CS FS-5 ③	-	■	-	-	■	-	d	2	3	-	**1 NO +1 NC +1 CO**	-
Safety modules for two-hand controls or synchronism monitoring												
CS DM-01	-	-	■	-	■	■	III C in compliance with EN ISO 13851			**3 NO + 1 NC**	-	-
CS DM-02	-	-	■	-	■	■	III C in compliance with EN ISO 13851			**2 NO**	-	-
CS DM-20	-	-	■	-	■	■	III A in compliance with EN ISO 13851			**2 NO**	-	-
Expansion modules with instantaneous contacts or delayed contacts at de-energizing												
CS ME-01	-	-	■	-	-	-	①	①	①	**5 NO + 1 NC**	-	**1 NC**
CS ME-02	-	■	-	-	-	-	①	①	①	**4 NO + 2 NC**	-	**1 NC**
CS ME-03	-	■	-	-	-	-	①	①	①	**3 NO**	-	**1 NC**
CS ME-20VU24-⑤	-	■	-	-	-	-	①	①	①	-	**4 NO + 2 NC**	**1 NC**
CS ME-31VU24-TS12	-	■	-	-	-	-	①	①	①	-	**4 NO + 2 NC**	**1 NC**

■ Available for this article
- Not available for this article

① Depending on the base module

② Category 4 for instantaneous contacts; Category 3 for delayed contacts.

③ Release times for delayed contacts
0 fixed time
1 adjustable, 0.3 … 3 s, 0.3 s steps
2 adjustable, 1 … 10 s, 1 s steps
3 adjustable, 3 … 30 s, 3 s steps
4 adjustable, 30 … 300 s, 30 s steps

④ Exclusively for module CS AR-07, there is no version with screw terminals.

⑤ Release time in absence of power supply
TF0.5 0.5 s fixed time
TF1 1 s fixed time
TF2 2 s fixed time
TF3 3 s fixed time

Product code	Start autom. & manual	Monitored start	Inputs of opposite potentials	Equipotential inputs	Parallel start (24 Vdc only)	Input type (⑥)				Housing dimensions	Page
CS AR-01	■	■	■	■	■	■	■	■	-	22,5 x 114 mm	19
CS AR-02	■	■	■	■	■	■	■	■	-	22,5 x 114 mm	21
CS AR-04	■	■	■	-	■	■	-	■	-	22,5 x 114 mm	23
CS AR-05	■	-	■	■	■	■	■	■	-	22,5 x 114 mm	25
CS AR-06	-	■	■	■	■	■	■	■	-	22,5 x 114 mm	25
CS AR-07	■	■	■	-	■	■	-	-	-	22,5 x 129 mm	27
CS AR-08	■	■	■	■	■	■	■	■	-	22,5 x 114 mm	29
CS AR-20	■	-	-	-	-	■	-	-	-	22,5 x 114 mm	31
CS AR-21	-	■	-	-	-	■	-	-	-	22,5 x 114 mm	31
CS AR-22	■	-	-	-	-	■	-	-	-	22,5 x 114 mm	33
CS AR-23	-	■	-	-	-	■	-	-	-	22,5 x 114 mm	33
CS AR-24	■	-	-	-	-	■	-	-	-	22,5 x 114 mm	35
CS AR-25	-	■	-	-	-	■	-	-	-	22,5 x 114 mm	35
CS AR-40	■	-	-	-	-	■	-	-	-	22,5 x 91 mm	37
CS AR-41	-	■	-	-	-	■	-	-	-	22,5 x 91 mm	37
CS AR-46	■	-	■	-	-	■	-	■	-	22,5 x 91 mm	39
CS AR-91	■	■	■	-	■	■	-	■	-	22,5 x 114 mm	41
CS AR-51	■	■	■	-	-	■	-	-	■	22,5 x 114 mm	43
CS AT-0 ③	■	■	■	■	■	■	■	■	-	45 x 114 mm	45
CS AT-1 ③	■	■	■	■	■	■	■	■	-	45 x 114 mm	47
CS AT-3 ③	■	■	■	-	-	■	-	■	-	45 x 114 mm	49
CS FS-1 ③	-	-	-	-	-	■	-	-	-	45 x 114 mm	51
CS FS-2 ③	-	-	-	-	-	■	-	-	-	45 x 114 mm	53
CS FS-3 ③	-	-	-	-	-	■	-	-	-	45 x 114 mm	55
CS FS-5 ③	■	■	-	■	-	■	-	■	-	45 x 114 mm	57
CS DM-01	-	-	■	-	-	■	-	-	-	22,5 x 114 mm	59
CS DM-02	-	-	■	-	-	■	-	-	-	22,5 x 114 mm	61
CS DM-20	-	-	■	-	-	■	-	-	-	22,5 x 114 mm	63
CS ME-01	-	-	①	①	-	■	-	-	-	22,5 x 114 mm	75
CS ME-02	-	-	①	①	-	■	-	-	-	22,5 x 114 mm	77
CS ME-03	-	-	-	■	-	■	■	-	-	22,5 x 91 mm	79
CS ME-20VU24-⑤	-	-	①	①	-	■	-	-	-	22,5 x 114 mm	81
CS ME-31VU24-TS12	-	-	①	①	-	■	-	-	-	45 x 114 mm	83

⑥ Input type
- electromechanical contacts
- semiconductor outputs (e.g. light barriers)
- magnetic safety sensors
- 4-wire safety mats and safety bumpers

Selection table for motor-control safety modules

Product code	Supply voltage						For applications up to			Output contacts		
	U12	U24	024	E02	120	230	PL	SIL	Safety category	instantaneous	delayed	feedback
For motor standstill, speed and motor-direction-of-rotation monitoring, CS AM series												
CS AM11	-	■	-	-	-	-	e	3	4	**2 OSSD**	**-**	**-**
CS AM12	-	■	-	-	-	-	e	3	4	**3 NO**	**-**	**-**
CS AM14	-	■	-	-	-	-	e	3	4	**2NO + 1NC**	**-**	**-**
CS AM21	-	■	-	-	-	-	e	3	4	**2 OSSD**	**-**	**-**
CS AM22	-	■	-	-	-	-	e	3	4	**3 NO**	**-**	**-**
CS AM23	-	■	-	-	-	-	e	3	4	**3 NO + 3NO**	**-**	**-**
CS AM31	-	■	-	-	-	-	e	3	4	**2 OSSD**	**-**	**-**
CS AM33	-	■	-	-	-	-	e	3	4	**3 NO + 3NO**	**-**	**-**

■ Available for this article
- Not available for this article

Product code	Safety function			Input type		Housing dimensions	Page
	Motor standstill detection	Motor speed detection	Direction-of-rotation detection	Sensorless	With proximity sensor		
CS AM11	■	-	-	■	■	22,5 x 114 mm	67
CS AM12	■	-	-	■	■	45 x 114 mm	67
CS AM14	■	-	-	■	■	45 x 114 mm	67
CS AM21	-	■	■	■	■	22,5 x 114 mm	67
CS AM22	-	■	■	■	■	45 x 114 mm	67
CS AM23	-	■	■	■	■	45 x 114 mm	67
CS AM31	■	■	■	■	■	22,5 x 114 mm	67
CS AM33	■	■	■	■	■	45 x 114 mm	67

Safety module **CS AR-01**

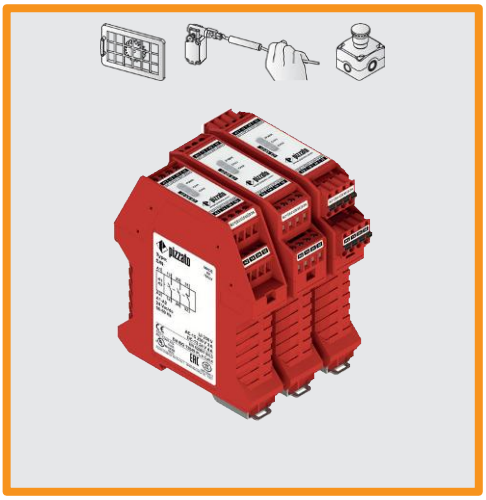

Module for emergency stops, end position monitoring for movable guards, OSSD semiconductor outputs and magnetic safety sensors

Main features

- For safety applications up to SIL 3/PL e
- Inputs: 1 or 2 channels, which can be connected to electromechanical contacts, magnetic safety sensors or OSSD solid-state outputs
- Outputs: relay, 2NO safety, 1NC signalling
- Input with configurable start: automatic, manual or monitored
- Supply voltage: 10 … 30 Vdc, 24 Vac/dc, 120 Vac, 230 Vac

Quality marks:

EC type examination certificate: IMQ CP 432 DM
UL approval: E131787
CCC approval: 2024010305656748
EAC approval: RU Д-IT.PA07.B.37848/24

Compliance with the requirements of:
Machinery Directive 2006/42/EC,
EMC Directive 2014/30/EU,
RoHS Directive 2011/65/EU.

In compliance with standards:
EN 60204-1, EN ISO 13855, EN ISO 14118, EN ISO 12100, EN ISO 13850, EN 60529, EN 61000-6-2, EN 61000-6-3, EN 61326-1, EN 60664-1, EN 60947-1, EN IEC 63000, EN ISO 13849-1, EN ISO 13849-2, EN 62061, UL 508, CSA C22.2 No. 14, GB/T14048.5

Technical data

Housing

Polyamide housing PA 66, self-extinguishing V0 acc. to UL 94	
Protection degree acc. to EN 60529:	IP40 (housing), IP20 (terminal strip)
Dimensions:	see page 135, design A

General data

Safety Integrity Level (SIL) up to:	Maximum SIL 3 acc. to EN 62061
Performance Level (PL) up to:	PL e acc. to EN ISO 13849-1
Safety category up to:	cat. 4 acc. to EN ISO 13849-1
Safety parameters:	See page 151
Ambient temperature:	-25°C…+55°C
Mechanical endurance:	>10 million operating cycles
Electrical endurance:	>100,000 operating cycles
Pollution degree:	external 3, internal 2
Rated impulse withstand voltage (U_{imp}):	4 kV
Rated insulation voltage (U_i):	250 V
Overvoltage category:	II

Power supply

Rated supply voltage (U_n):	10 … 30 Vdc 24 Vac/dc; 50…60 Hz 120 Vac/dc; 50 … 60 Hz 230 Vac/dc; 50 … 60 Hz
Max. DC residual ripple in DC:	10%
Supply voltage tolerance:	-10% … +15% of U_n for 24 Vac/dc ±15% of U_n for 120 Vac, 230 Vac
Power consumption AC:	< 5 VA
Power consumption DC:	< 2 W, < 3 W (CS AR-01•E02)

Control circuit

Protection against short circuits:	PTC resistance, Ih=0.5 A
PTC times:	response > 100 ms, reset > 3 s
Maximum resistance per input:	≤ 50 Ω
Current per input:	30 mA (typical)
Min. duration of start impulse t_{MIN}:	> 100 ms, > 50 ms (E02)
Response time t_A:	< 300 ms, < 150 ms (E02)
Release time t_{R1}:	< 20 ms
Release time in absence of power supply t_R:	< 70 ms, < 100 ms (E02)
Simultaneity time t_C:	unlimited

Output circuit

Output contacts:	2 NO safety contacts, 1 NC auxiliary contact
Contact type:	forcibly guided
Material of the contacts:	silver alloy
Maximum switching voltage:	230/240 Vac; 300 Vdc
Utilization categories for output contacts:	AC-15 (50 ... 60 Hz), 230 V / 3 A DC-13 (6 oper. cycles/min.), 24 V / 4 A
Maximum conventional free air thermal current per branch I_{th}:	6 A
Max. total current ΣI_{th}^2:	72 A²
Minimum current:	10 mA
Contact resistance:	≤ 100 mΩ
External protection fuse:	4 A

The number and the load capacity of output contacts can be increased by using expansion modules or contactors. See pages 75-84.

Code structure

CS AR-01V024

Connection type	
V	Screw terminals
M	Connector with screw terminals
X	Connector with spring terminals

Supply voltage	
024	24 Vac/dc
120	120 Vac
230	230 Vac
E02	10 … 30 Vdc

Features approved by UL

Rated supply voltage (U_n):	10 … 30 Vdc 24 Vac/dc; 50…60 Hz 120 Vac; 50…60 Hz 230 Vac; 50…60 Hz
Power consumption AC:	< 5 VA
Power consumption DC:	< 4 W

Electrical ratings:
- NO contacts: 230/240 Vac, 6 A general use, C300 pilot duty
- NC contacts: 230/240 Vac, 6 A resistive, B300 pilot duty

Notes:
- Use 60 or 75°C copper (Cu) conductor and wire size No. 30-12 AWG, stranded or solid.
- The terminal tightening torque of 5-7 lb in.
- Only for 10 … 30 Vdc and 24 Vac/dc versions: supply from remote Class 2 source or limited voltage limited energy.

- Utiliser des conducteurs en cuivre (Cu) 60 ou 75°C rigides ou flexibles de section 30-12 AWG.
- Couple de serrage des bornes de 5-7 Lb In.
- Seulement pour les versions 10 ... 30 Vdc et 24 Vac/dc, alimenter avec sources de classes 2 ou avec tension limitée et énergie limitée.

Safety module CS AR-01

Pin assignment

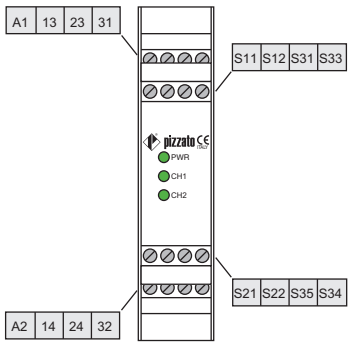

Internal wiring diagram

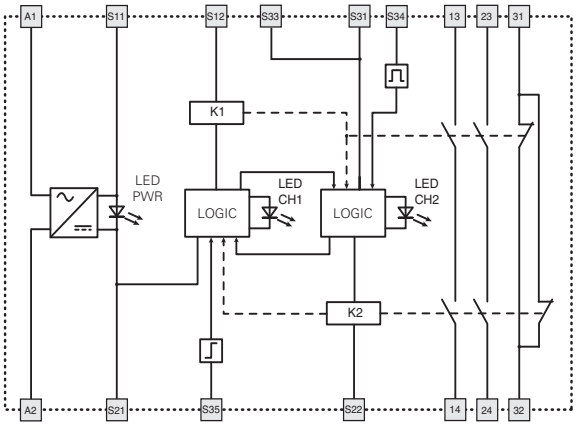

Function diagrams

Configuration with automatic start

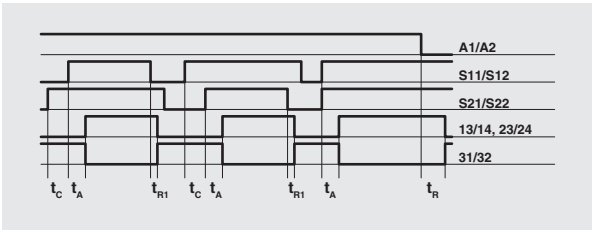

Configuration with monitored start

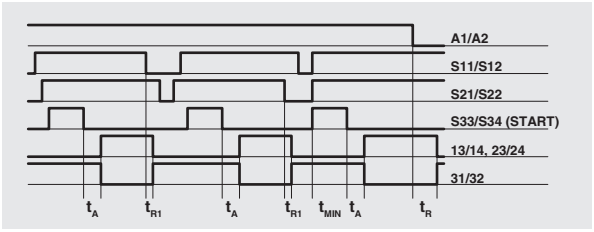

Configuration with manual start

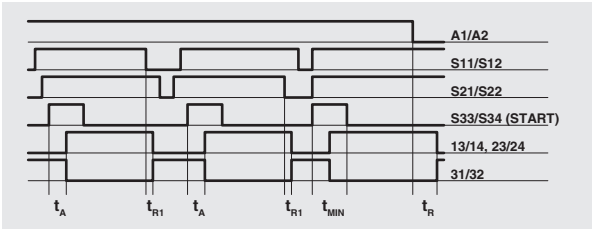

Legend:

t_{MIN}: Min. duration of start impulse
t_c: Simultaneity time
t_A: Response time
t_{R1}: Release time
t_R: Release time in absence of power supply

Notes:
The configurations with one channel are obtained taking into consideration the S11/S12 input only. In this case it is necessary to consider time t_{R1} referred to input S11/S12, time t_R referred to the supply, time t_A referred to input S11/S12 and to the start, and time t_{MIN} referred to the start.

Input configuration

OSSD semiconductor outputs (e.g. ST, NS, NG series or light barriers)

Input configuration with manual start

1 channel

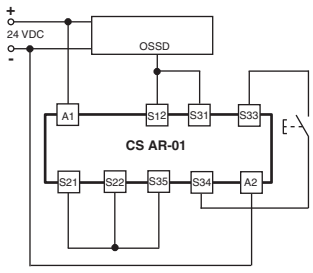

2 channels

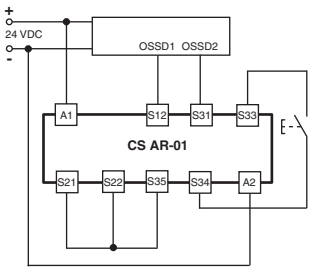

Emergency stop circuits

Input configuration with manual start

1 channel

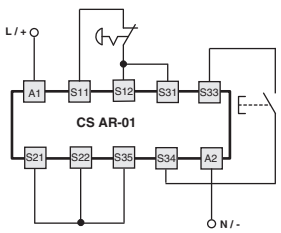

2 channels

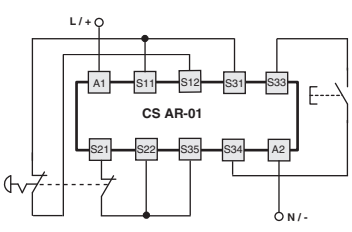

The diagram does not show the exact position of the terminals in the product

Automatic start

With regard to the indicated diagrams, bridge the start button between S33 and S34 in order to activate the automatic start module.

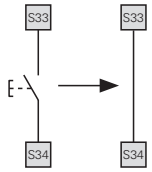

Monitored start

With regard to the indicated diagrams, remove the connection between the S22 and S35 terminals in order to activate the monitored start module.

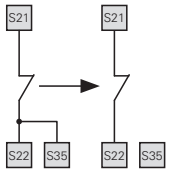

Monitoring of movable guards and magnetic safety sensors

The safety module can monitor emergency stop circuits, control circuits for movable guards as well as magnetic safety sensors. Replace the emergency stop contacts with switch contacts or sensor contacts.
The sensors can only be used in 2-channel configuration.

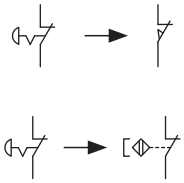

Application examples See page 85

Safety module **CS AR-02**

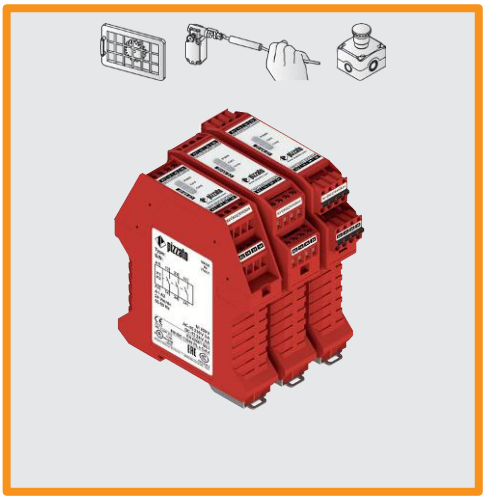

Module for emergency stops, end position monitoring for movable guards, OSSD semiconductor outputs and magnetic safety sensors

Main features

- For safety applications up to SIL 3/PL e
- Inputs: 1 or 2 channels, which can be connected to electromechanical contacts, magnetic safety sensors or OSSD solid-state outputs
- Outputs: relay, 3NO safety
- Input with configurable start: automatic, manual or monitored
- Supply voltage: 10 … 30 Vdc, 24 Vac/dc, 120 Vac, 230 Vac

Quality marks:

EC type examination certificate: IMQ CP 432 DM
UL approval: E131787
CCC approval: 2024010305656748
EAC approval: RU Д-IT.PA07.B.37848/24

Compliance with the requirements of:
Machinery Directive 2006/42/EC,
EMC Directive 2014/30/EU,
RoHS Directive 2011/65/EU.

In compliance with standards:
EN 60204-1, EN ISO 13855, EN ISO 14118, EN ISO 12100, EN ISO 13850, EN 60529, EN 61000-6-2, EN 61000-6-3, EN 61326-1, EN 60664-1, EN 60947-1, EN IEC 63000, EN ISO 13849-1, EN ISO 13849-2, EN 62061, UL 508, CSA C22.2 No. 14, GB/T14048.5

Technical data

Housing

Polyamide housing PA 66, self-extinguishing V0 acc. to UL 94	
Protection degree acc. to EN 60529:	IP40 (housing), IP20 (terminal strip)
Dimensions:	see page 135, design A

General data

Safety Integrity Level (SIL) up to:	Maximum SIL 3 acc. to EN 62061
Performance Level (PL) up to:	PL e acc. to EN ISO 13849-1
Safety category up to:	cat. 4 acc. to EN ISO 13849-1
Safety parameters:	See page 151
Ambient temperature:	-25°C…+55°C
Mechanical endurance:	>10 million operating cycles
Electrical endurance:	>100,000 operating cycles
Pollution degree:	external 3, internal 2
Rated impulse withstand voltage (U_{imp}):	4 kV
Rated insulation voltage (U_i):	250 V
Overvoltage category:	II

Power supply

Rated supply voltage (U_n):	10 … 30 Vdc 24 Vac/dc; 50…60 Hz 120 Vac/dc; 50 … 60 Hz 230 Vac/dc; 50 … 60 Hz
Max. DC residual ripple in DC:	10%
Supply voltage tolerance:	-10% … +15% of U_n for 24 Vac/dc ±15% of U_n for 120 Vac, 230 Vac
Power consumption AC:	< 5 VA
Power consumption DC:	< 2 W, < 3 W (CS AR-02•E02)

Control circuit

Protection against short circuits:	PTC resistance, Ih=0.5 A
PTC times:	response > 100 ms, reset > 3 s
Maximum resistance per input:	≤ 50 Ω
Current per input:	< 30 mA
Min. duration of start impulse t_{MIN}:	> 100 ms, > 50 ms (E02)
Response time t_A:	< 300 ms, < 150 ms (E02)
Release time t_{R1}:	< 20 ms
Release time in absence of power supply t_R:	< 70 ms, < 100 ms (E02)
Simultaneity time t_C:	unlimited

Output circuit

Output contacts:	3 NO safety contacts,
Contact type:	forcibly guided
Material of the contacts:	silver alloy
Maximum switching voltage:	230/240 Vac; 300 Vdc
Utilization categories for output contacts:	AC-15 (50 ... 60 Hz), 230 V / 3 A DC-13 (6 oper. cycles/min.), 24 V / 4 A
Maximum conventional free air thermal current per branch I_{th}:	6 A
Max. total current ΣI_{th}^2:	72 A²
Minimum current:	10 mA
Contact resistance:	≤ 100 mΩ
External protection fuse:	4 A

The number and the load capacity of output contacts can be increased by using expansion modules or contactors. See pages 75-84.

Code structure

CS AR-02V024

Connection type	
V	Screw terminals
M	Connector with screw terminals
X	Connector with spring terminals

Supply voltage	
024	24 Vac/dc
120	120 Vac
230	230 Vac
E02	10 … 30 Vdc

Features approved by UL

Rated supply voltage (U_n):	10 … 30 Vdc 24 Vac/dc; 50…60 Hz 120 Vac; 50…60 Hz 230 Vac; 50…60 Hz
Power consumption AC:	< 5 VA
Power consumption DC:	< 4 W

Electrical ratings:
- NO contacts: 230/240 Vac, 6 A general use, C300 pilot duty
- NC contacts: 230/240 Vac, 6 A resistive, B300 pilot duty

Notes:
- Use 60 or 75°C copper (Cu) conductor and wire size No. 30-12 AWG, stranded or solid.
- The terminal tightening torque of 5-7 lb in.
- Only for 10 … 30 Vdc and 24 Vac/dc versions: supply from remote Class 2 source or limited voltage limited energy.

- Utiliser des conducteurs en cuivre (Cu) 60 ou 75°C rigides ou flexibles de section 30-12 AWG.
- Couple de serrage des bornes de 5-7 Lb In.
- Seulement pour les versions 10 ... 30 Vdc et 24 Vac/dc, alimenter avec sources de classes 2 ou avec tension limitée et énergie limitée.

Safety module CS AR-02

Pin assignment

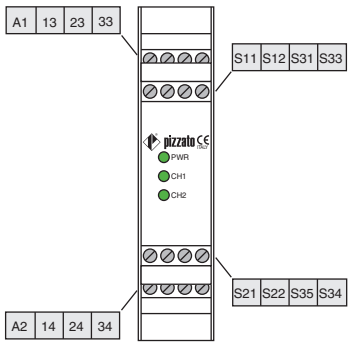

Internal wiring diagram

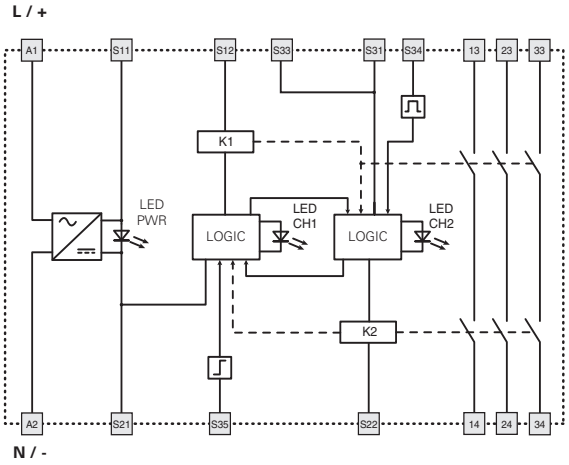

Function diagrams

Configuration with automatic start

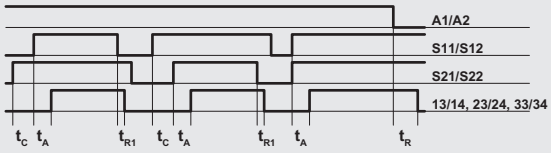

Configuration with monitored start

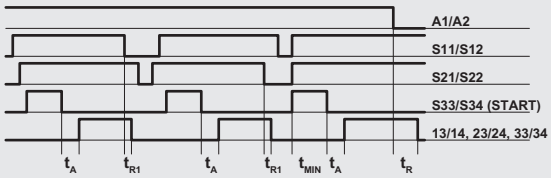

Configuration with manual start

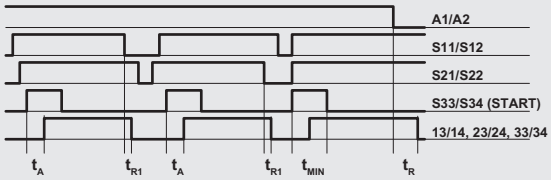

Legend:

t_{MIN}:	Min. duration of start impulse	t_{R1}:	Release time
t_C:	Simultaneity time	t_R:	Release time in absence of power supply
t_A:	Response time		

Notes:
The configurations with one channel are obtained taking into consideration the S11/S12 input only. In this case it is necessary to consider time t_{R1} referred to input S11/S12, time t_R referred to the supply, time t_A referred to input S11/S12 and to the start, and time t_{MIN} referred to the start.

Input configuration

OSSD semiconductor outputs (e.g. ST, NS, NG series or light barriers)

Input configuration with manual start

1 channel

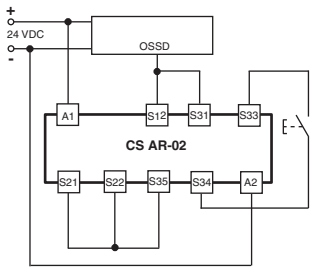

2 channels

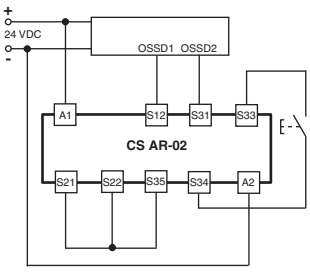

Emergency stop circuits

Input configuration with manual start

1 channel

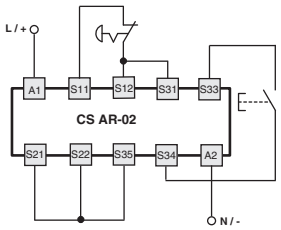

2 channels

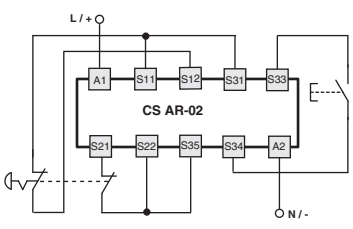

The diagram does not show the exact position of the terminals in the product

Automatic start

With regard to the indicated diagrams, bridge the start button between S33 and S34 in order to activate the automatic start module.

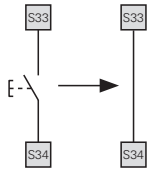

Monitored start

With regard to the indicated diagrams, remove the connection between the S22 and S35 terminals in order to activate the monitored start module.

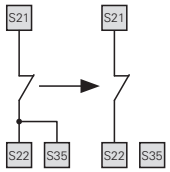

Monitoring of movable guards and magnetic safety sensors

The safety module can monitor emergency stop circuits, control circuits for movable guards as well as magnetic safety sensors. Replace the emergency stop contacts with switch contacts or sensor contacts.
The sensors can only be used in 2-channel configuration.

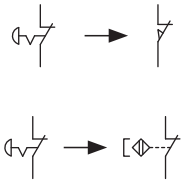

Application examples See page 85

Safety module **CS AR-04**

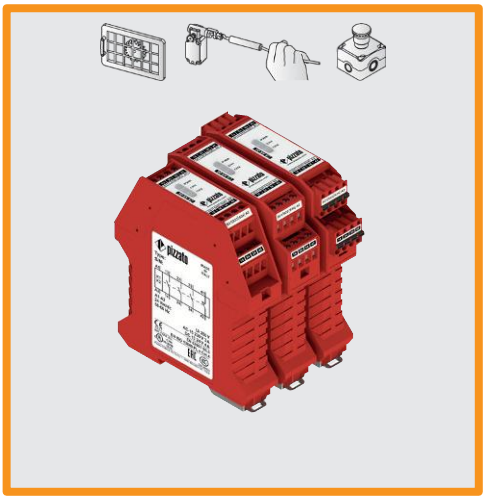

Module for emergency stops, end position monitoring for movable guards and magnetic safety sensors

Main features

- For safety applications up to SIL 3/PL e
- Inputs: 1 or 2 channels, which can be connected to electromechanical contacts or magnetic safety sensors
- Connection of input channels of opposite potentials
- Outputs: relay, 3NO safety, 1NC signalling
- Input with configurable start: automatic, manual or monitored
- Supply voltage: 24 Vac/dc, 120 Vac, 230 Vac

Quality marks:

EC type examination certificate: IMQ CP 432 DM
UL approval: E131787
CCC approval: 2024010305656748
EAC approval: RU Д-IT.PA07.B.37848/24

Compliance with the requirements of:
Machinery Directive 2006/42/EC,
EMC Directive 2014/30/EU,
RoHS Directive 2011/65/EU.

In compliance with standards:
EN 60204-1, EN ISO 13855, EN ISO 14118,
EN ISO 12100, EN ISO 13850, EN 60529, EN 61000-6-2,
EN 61000-6-3, EN 61326-1, EN 60664-1, EN 60947-1,
EN IEC 63000, EN ISO 13849-1, EN ISO 13849-2,
EN 62061, UL 508, CSA C22.2 No. 14, GB/T14048.5

Technical data

Housing

Polyamide housing PA 66, self-extinguishing V0 acc. to UL 94	
Protection degree acc. to EN 60529:	IP40 (housing), IP20 (terminal strip)
Dimensions:	see page 135, design A

General data

Safety Integrity Level (SIL) up to:	Maximum SIL 3 acc. to EN 62061
Performance Level (PL) up to:	PL e acc. to EN ISO 13849-1
Safety category up to:	cat. 4 acc. to EN ISO 13849-1
Safety parameters:	See page 151
Ambient temperature:	-25°C…+55°C
Mechanical endurance:	>10 million operating cycles
Electrical endurance:	>100,000 operating cycles
Pollution degree:	external 3, internal 2
Rated impulse withstand voltage (U_{imp}):	4 kV
Rated insulation voltage (U_i):	250 V
Overvoltage category:	II

Power supply

Rated supply voltage (U_n):	24 Vac/dc; 50…60 Hz 120 Vac; 50…60 Hz 230 Vac; 50…60 Hz
Max. DC residual ripple in DC:	10%
Supply voltage tolerance:	±15% of U_n
Power consumption AC:	< 5 VA
Power consumption DC:	< 2 W

Control circuit

Protection against short circuits:	PTC resistance, Ih=0.5 A
PTC times:	response > 100 ms, reset > 3 s
Maximum resistance per input:	≤ 50 Ω
Current per input:	< 30 mA
Min. duration of start impulse t_{MIN}:	> 100 ms
Response time t_A:	< 50 ms
Release time t_{R1}:	< 20 ms
Release time in absence of power supply t_R:	< 70 ms
Simultaneity time t_C:	unlimited

Output circuit

Output contacts:	3 NO safety contacts 1 NC auxiliary contact
Contact type:	forcibly guided
Material of the contacts:	silver alloy
Maximum switching voltage:	230/240 Vac; 300 Vdc
Utilization categories for output contacts:	AC-15 (50 ... 60 Hz), 230 V / 3 A DC-13 (6 oper. cycles/min.), 24 V / 4 A
Maximum conventional free air thermal current per branch I_{th}:	6 A
Max. total current ΣI_{th}^2:	64 A^2
Minimum current:	10 mA
Contact resistance:	≤ 100 mΩ
External protection fuse:	4 A

The number and the load capacity of output contacts can be increased by using expansion modules or contactors. See pages 75-84.

Code structure

CS AR-04V024

Connection type		Supply voltage	
V	Screw terminals	**024**	24 Vac/dc
M	Connector with screw terminals	**120**	120 Vac
X	Connector with spring terminals	**230**	230 Vac

Features approved by UL

Rated supply voltage (U_n):	24 Vac/dc; 50…60 Hz 120 Vac; 50…60 Hz 230 Vac; 50…60 Hz
Power consumption AC:	< 5 VA
Power consumption DC:	< 4 W

Electrical ratings:
- NO contacts: 230/240 Vac, 6 A general use, C300 pilot duty
- NC contacts: 230/240 Vac, 6 A resistive, B300 pilot duty

Notes:
- Use 60 or 75°C copper (Cu) conductor and wire size No. 30-12 AWG, stranded or solid.
- The terminal tightening torque of 5-7 lb in.
- Only for 24 Vac/dc versions: supply from remote Class 2 source or limited voltage limited energy.

- Utiliser des conducteurs en cuivre (Cu) 60 ou 75°C rigides ou flexibles de section 30-12 AWG.
- Couple de serrage des bornes de 5-7 Lb In.
- Seulement pour les versions 24 Vac/dc, alimenter avec sources de classes 2 ou avec tension limitée et énergie limitée.

Safety module CS AR-04

Pin assignment

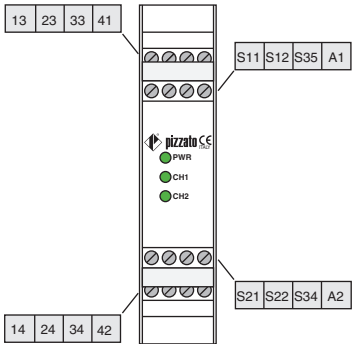

Internal wiring diagram

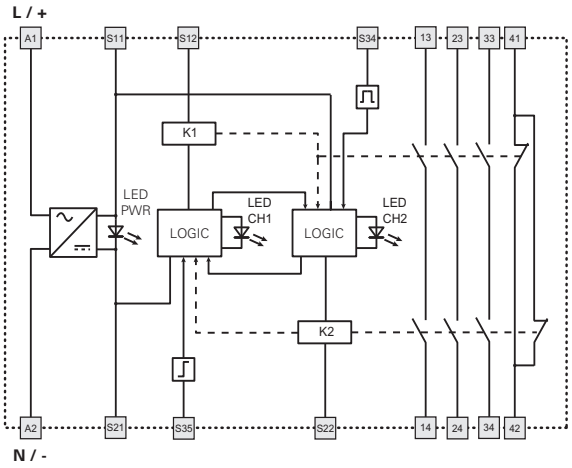

Function diagrams

Configuration with automatic start

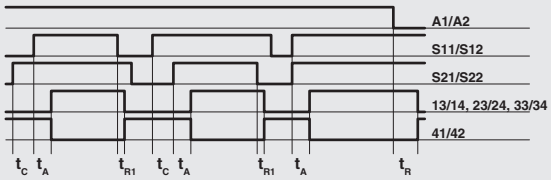

Configuration with monitored start

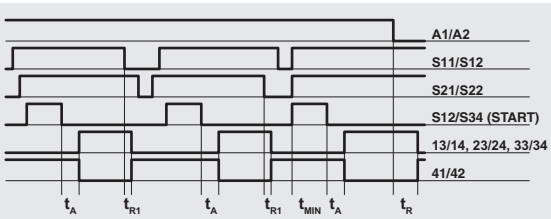

Configuration with manual start

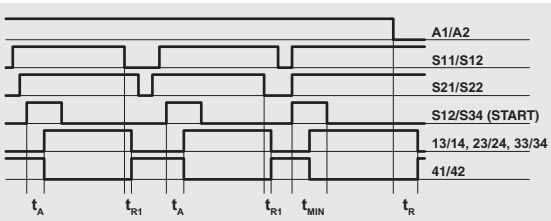

Legend:

t_{MIN}:	Min. duration of start impulse	t_{R1}:	Release time
t_C:	Simultaneity time	t_R:	Release time in absence of power supply
t_A:	Response time		

Notes:
The configurations with one channel are obtained taking into consideration only the effect of the S11/S12 input on the supply. In this case it is necessary to consider time t_{R1} referred to input S11/S12, time t_R referred to the supply, time t_A referred to input S11/S12 and to the start, and time t_{MIN}.

Input configuration

Emergency stop circuits	
Input configuration with manual start	
1 channel	2 channels

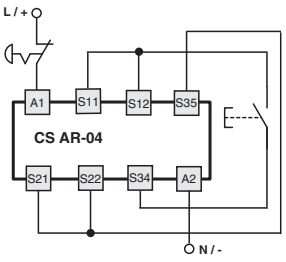

The diagram does not show the exact position of the terminals in the product

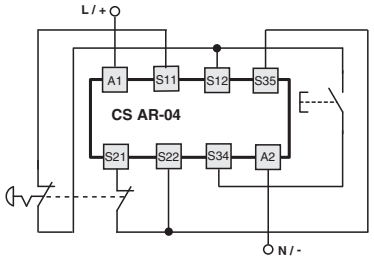

Automatic start

With regard to the indicated diagrams, bridge the start button between S12 and S34 in order to activate the automatic start module.

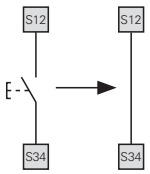

Monitored start

With regard to the indicated diagrams, remove the connection between the S22 and S35 terminals in order to activate the monitored start module.

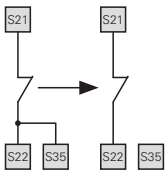

Monitoring of movable guards and magnetic safety sensors

The safety module can monitor emergency stop circuits, control circuits for movable guards as well as magnetic safety sensors. Replace the emergency stop contacts with switch contacts or sensor contacts.
The sensors can only be used in 2-channel configuration.

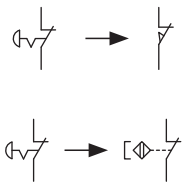

Application examples See page 85

Safety module **CS AR-05 / CS AR-06**

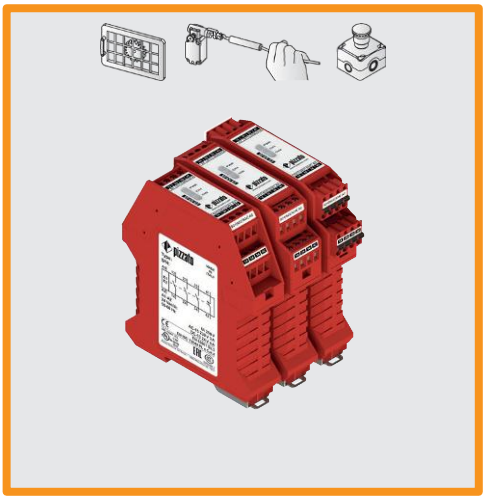

Module for emergency stops, end position monitoring for movable guards, OSSD semiconductor outputs and magnetic safety sensors

Main features

- For safety applications up to SIL 3/PL e
- Inputs: 1 or 2 channels, which can be connected to electromechanical contacts, magnetic safety sensors or OSSD solid-state outputs
- Outputs: relay, 3NO safety, 1NC signalling
- Input with configurable start: automatic, manual (CS AR-05 only) or monitored (CS AR-06 only)
- Supply voltage: 24 Vac/dc, 120 Vac, 230 Vac

Quality marks:

EC type examination certificate: IMQ CP 432 DM
UL approval: E131787
CCC approval: 2024010305656748
EAC approval: RU Д-IT.PA07.B.37848/24

Compliance with the requirements of:
Machinery Directive 2006/42/EC,
EMC Directive 2014/30/EU,
RoHS Directive 2011/65/EU.

In compliance with standards:
EN 60204-1, EN ISO 13855, EN ISO 14118, EN ISO 12100, EN ISO 13850, EN 60529, EN 61000-6-2, EN 61000-6-3, EN 61326-1, EN 60664-1, EN 60947-1, EN IEC 63000, EN ISO 13849-1, EN ISO 13849-2, EN 62061, UL 508, CSA C22.2 No. 14, GB/T14048.5

Technical data

Housing

Polyamide housing PA 66, self-extinguishing V0 acc. to UL 94	
Protection degree acc. to EN 60529:	IP40 (housing), IP20 (terminal strip)
Dimensions:	see page 135, design A

General data

Safety Integrity Level (SIL) up to:	Maximum SIL 3 acc. to EN 62061
Performance Level (PL) up to:	PL e acc. to EN ISO 13849-1
Safety category up to:	cat. 4 acc. to EN ISO 13849-1
Safety parameters:	See page 151
Ambient temperature:	-25°C…+55°C
Mechanical endurance:	>10 million operating cycles
Electrical endurance:	>100,000 operating cycles
Pollution degree:	external 3, internal 2
Rated impulse withstand voltage (U_{imp}):	4 kV
Rated insulation voltage (U_i):	250 V
Overvoltage category:	II

Power supply

Rated supply voltage (U_n):	24 Vac/dc; 50…60 Hz 120 Vac/dc; 50 … 60 Hz 230 Vac/dc; 50 … 60 Hz
Max. DC residual ripple in DC:	10%
Supply voltage tolerance:	-10% … +15% of U_n for 24 Vac/dc ±15% of U_n for 120 Vac, 230 Vac
Power consumption AC:	< 5 VA
Power consumption DC:	< 2 W

Control circuit

Protection against short circuits:	PTC resistance, Ih=0.5 A
PTC times:	response > 100 ms, reset > 3 s
Maximum resistance per input:	≤ 50 Ω
Current per input:	< 30 mA
Min. duration of start impulse t_{MIN}:	> 250 ms
Response time t_A:	< 300 ms
Release time t_{R1}:	< 15 ms
Release time in absence of power supply t_R:	< 70 ms
Simultaneity time t_C:	unlimited

Output circuit

Output contacts:	3 NO safety contacts 1 NC auxiliary contact
Contact type:	forcibly guided
Material of the contacts:	silver alloy
Maximum switching voltage:	230/240 Vac; 300 Vdc
Utilization categories for output contacts:	AC-15 (50 ... 60 Hz), 230 V / 3 A DC-13 (6 oper. cycles/min.), 24 V / 4 A
Maximum conventional free air thermal current per branch I_{th}:	6 A
Max. total current Σ I_{th}^2:	64 A²
Minimum current:	10 mA
Contact resistance:	≤ 100 mΩ
External protection fuse:	4 A

The number and the load capacity of output contacts can be increased by using expansion modules or contactors. See pages 75-84.

Code structure

CS AR-05V024

Start mode	
05	manual or automatic start
06	monitored start

Connection type	
V	Screw terminals
M	Connector with screw terminals
X	Connector with spring terminals

Supply voltage	
024	24 Vac/dc
120	120 Vac
230	230 Vac

Features approved by UL

Rated supply voltage (U_n):	24 Vac/dc; 50…60 Hz 120 Vac; 50…60 Hz 230 Vac; 50…60 Hz
Power consumption AC:	< 5 VA
Power consumption DC:	< 4 W

Electrical ratings:
- NO contacts: 230/240 Vac, 6 A general use, C300 pilot duty
- NC contacts: 230/240 Vac, 6 A resistive, B300 pilot duty

Notes:
- Use 60 or 75°C copper (Cu) conductor and wire size No. 30-12 AWG, stranded or solid.
- The terminal tightening torque of 5-7 lb in.
- Only for 24 Vac/dc versions: supply from remote Class 2 source or limited voltage limited energy.

- Utiliser des conducteurs en cuivre (Cu) 60 ou 75°C rigides ou flexibles de section 30-12 AWG.
- Couple de serrage des bornes de 5-7 Lb In.
- Seulement pour les versions 24 Vac/dc, alimenter avec sources de classes 2 ou avec tension limitée et énergie limitée.

Safety module CS AR-05 / CS AR-06

Pin assignment

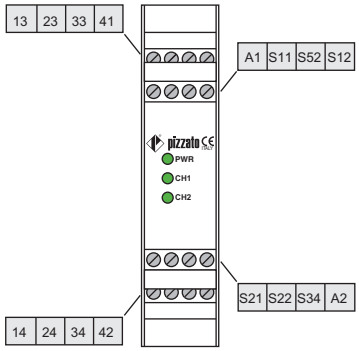

Internal wiring diagram

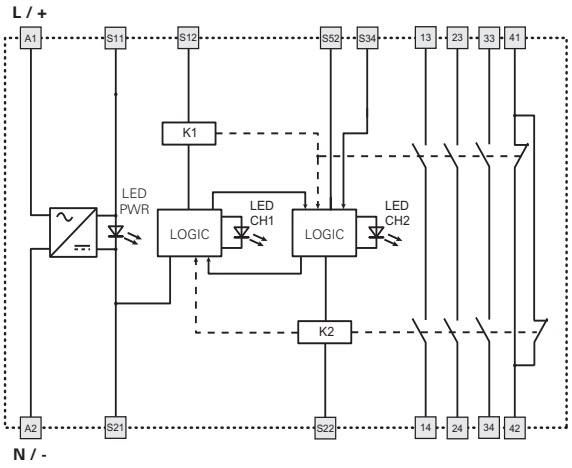

Function diagrams

Configuration with automatic start (CS AR-05 only)

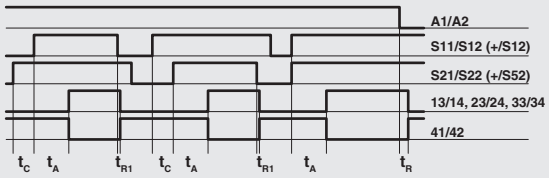

Configuration with monitored start (CS AR-06 only)

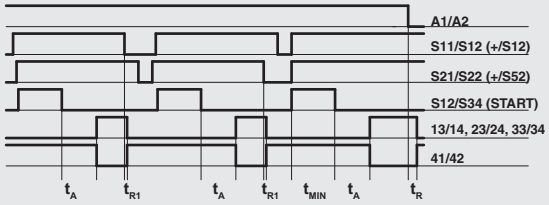

Configuration with manual start (CS AR-05 only)

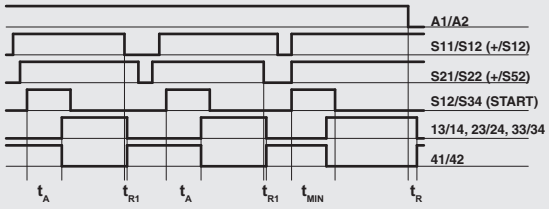

Legend:

t_{MIN}:	Min. duration of start impulse	t_{R1}:	Release time
t_C:	Simultaneity time	t_R:	Release time in absence of power supply
t_A:	Response time		

Notes:
The configurations with one channel are obtained taking into consideration the CH1 input only. In this case it is necessary to consider time t_{R1} referred to input CH1, time t_R referred to the supply, time t_A referred to input CH1 and to the start, and time t_{MIN} referred to the start.

Input configuration

OSSD semiconductor outputs (e.g. ST, NS, NG series or light barriers)

Input configuration with manual start (CS AR-05)

1 channel

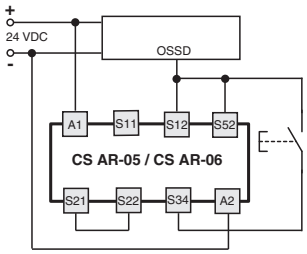

2 channels

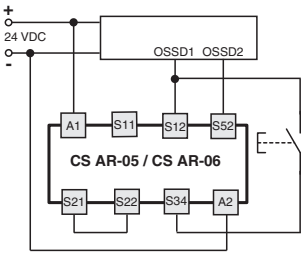

Emergency stop circuits

Input configuration with manual start (CS AR-05)

1 channel

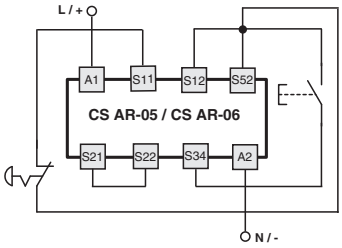

2 channels

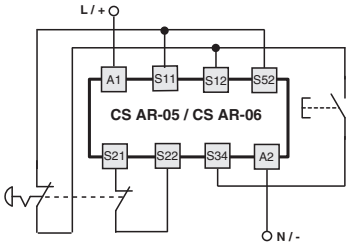

The diagram does not show the exact position of the terminals in the product

Automatic start (CS AR-05 only)

Bridge the start button between S12 and S34 in order to activate the automatic start module.

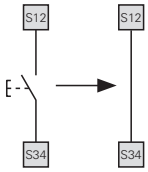

Monitored start

Use module CS AR-06 with the circuit diagrams for manual start.

Monitoring of movable guards and magnetic safety sensors

The safety module can monitor emergency stop circuits, control circuits for movable guards as well as magnetic safety sensors. Replace the emergency stop contacts with switch contacts or sensor contacts. **The sensors can only be used in 2-channel configuration.**

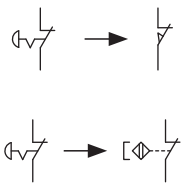

Application examples See page 85

Safety module **CS AR-07**

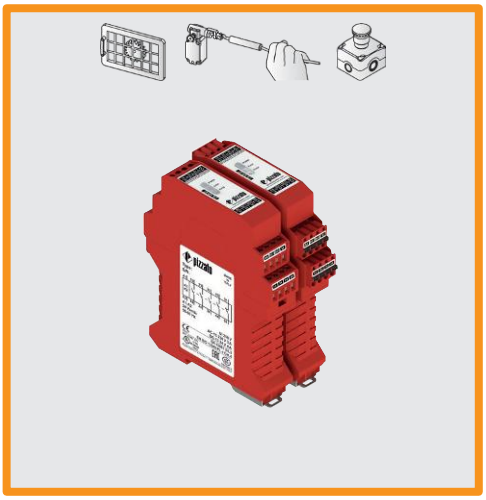

Module for emergency stops and end position monitoring for movable guards

Main features

- For safety applications up to SIL 3/PL e
- Inputs: 1 or 2 channels, which can be connected to electromechanical contacts
- Connection of input channels of opposite potentials
- Outputs: relay, 4NO safety, 1NC signalling
- Input with configurable start: automatic, manual or monitored
- Supply voltage: 24 Vac/dc

Quality marks:

EC type examination certificate: IMQ CP 432 DM
UL approval: E131787
CCC approval: 2024010305656748
EAC approval: RU Д-IT.PA07.B.37848/24

Compliance with the requirements of:
Machinery Directive 2006/42/EC,
EMC Directive 2014/30/EU,
RoHS Directive 2011/65/EU.

In compliance with standards:
EN 60204-1, EN ISO 13855, EN ISO 14118,
EN ISO 12100, EN ISO 13850, EN 60529, EN 61000-6-2,
EN 61000-6-3, EN 61326-1, EN 60664-1, EN 60947-1,
EN IEC 63000, EN ISO 13849-1, EN ISO 13849-2,
EN 62061, UL 508, CSA C22.2 No. 14, GB/T14048.5

Technical data

Housing

Polyamide housing PA 66, self-extinguishing V0 acc. to UL 94	
Protection degree acc. to EN 60529:	IP40 (housing), IP20 (terminal strip)
Dimensions:	see page 135, design B

General data

Safety Integrity Level (SIL) up to:	Maximum SIL 3 acc. to EN 62061
Performance Level (PL) up to:	PL e acc. to EN ISO 13849-1
Safety category up to:	cat. 4 acc. to EN ISO 13849-1
Safety parameters:	See page 151
Ambient temperature:	-25°C…+55°C
Mechanical endurance:	>10 million operating cycles
Electrical endurance:	>100,000 operating cycles
Pollution degree:	external 3, internal 2
Rated impulse withstand voltage (U_{imp}):	4 kV
Rated insulation voltage (U_i):	250 V
Overvoltage category:	II

Power supply

Rated supply voltage (U_n):	24 Vac/dc; 50…60 Hz
Max. DC residual ripple in DC:	10%
Supply voltage tolerance:	±15% of U_n
Power consumption AC:	< 5 VA
Power consumption DC:	< 2 W

Control circuit

Protection against short circuits:	PTC resistance, Ih=0.5 A
PTC times:	response > 100 ms, reset > 3 s
Maximum resistance per input:	≤ 50 Ω
Current per input:	< 30 mA
Min. duration of start impulse t_{MIN}:	> 100 ms
Response time t_A:	< 70 ms
Release time t_{R1}:	< 40 ms
Release time in absence of power supply t_R:	< 80 ms
Simultaneity time t_C:	unlimited

Output circuit

Output contacts:	4 NO safety contacts 1 NC auxiliary contact
Contact type:	forcibly guided
Material of the contacts:	silver alloy
Maximum switching voltage:	230/240 Vac; 220 Vdc
Utilization categories for output contacts:	AC-15 (50 ... 60 Hz), 230 V / 3 A DC-13 (6 oper. cycles/min.), 24 V / 4 A
Maximum conventional free air thermal current per branch I_{th}:	6 A
Max. total current Σ I_{th}^2:	72 A²
Minimum current:	10 mA
Contact resistance:	≤ 100 mΩ
External protection fuse:	4 A

The number and the load capacity of output contacts can be increased by using expansion modules or contactors. See pages 75-84.

Code structure

CS AR-07M024

Connection type		Supply voltage	
M	Connector with screw terminals	**024**	24 Vac/dc
X	Connector with spring terminals		

Features approved by UL

Rated supply voltage (U_n):	24 Vac/dc; 50…60 Hz
Power consumption AC:	< 5 VA
Power consumption DC:	< 4 W

Electrical ratings:
- NO contacts: 230/240 Vac, 6 A general use, C300 pilot duty
- NC contacts: 230/240 Vac, 6 A resistive, B300 pilot duty

Notes:
- Use 60 or 75°C copper (Cu) conductor and wire size No. 30-12 AWG, stranded or solid.
- The terminal tightening torque of 5-7 lb in.
- Only for 24 Vac/dc versions: supply from remote Class 2 source or limited voltage limited energy.

- Utiliser des conducteurs en cuivre (Cu) 60 ou 75°C rigides ou flexibles de section 30-12 AWG.
- Couple de serrage des bornes de 5-7 Lb In.
- Seulement pour les versions 24 Vac/dc, alimenter avec sources de classes 2 ou avec tension limitée et énergie limitée.

Safety module CS AR-07

Pin assignment

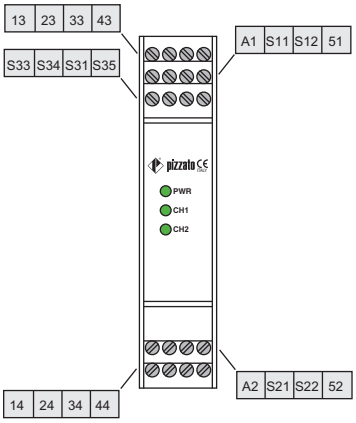

Internal wiring diagram

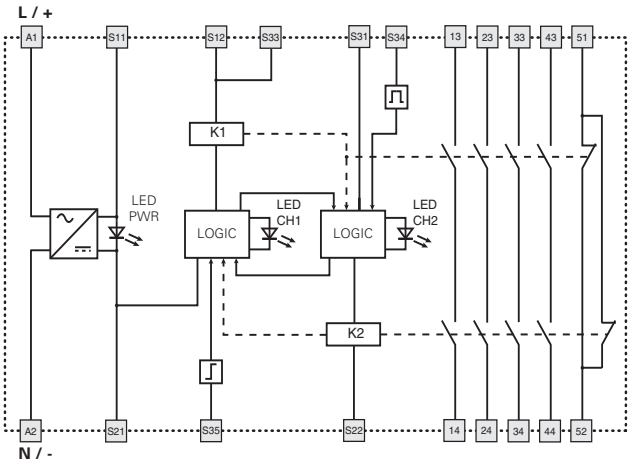

Function diagrams

Configuration with automatic start

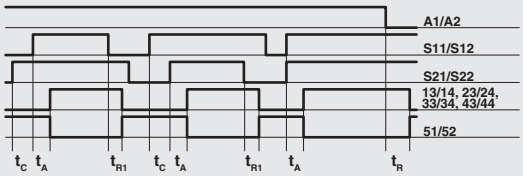

Configuration with monitored start

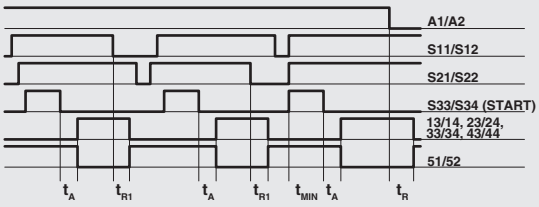

Configuration with manual start

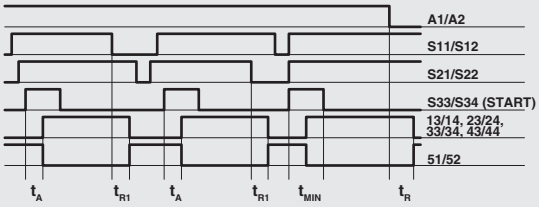

Legend:

t_{MIN}:	Min. duration of start impulse	t_{R1}:	Release time
t_C:	Simultaneity time	t_R:	Release time in absence of power supply
t_A:	Response time		

Notes:
The configurations with one channel are obtained taking into consideration the S11/S12 input only. In this case it is necessary to consider time t_{R1} referred to input S11/S12, time t_R referred to the supply, time t_A referred to input S11/S12 and to the start, and time t_{MIN} referred to the start.

Input configuration

Emergency stop circuits	
Input configuration with manual start	
1 channel	2 channels

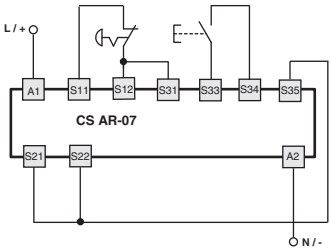

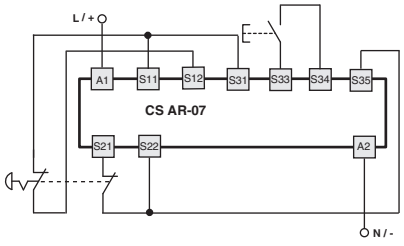

The diagram does not show the exact position of the terminals in the product

Automatic start

With regard to the indicated diagrams, bridge the start button between S33 and S34 in order to activate the automatic start module.

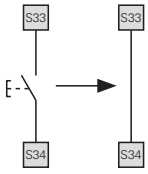

Monitored start

With regard to the indicated diagrams, remove the connection between the S22 and S35 terminals in order to activate the monitored start module.

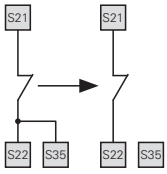

Movable guard monitoring

The safety module can monitor emergency stop circuits and control circuits for movable guards. Replace the emergency stop contacts with the switch contacts.

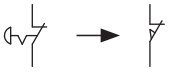

Application examples See page 85

Safety module **CS AR-08**

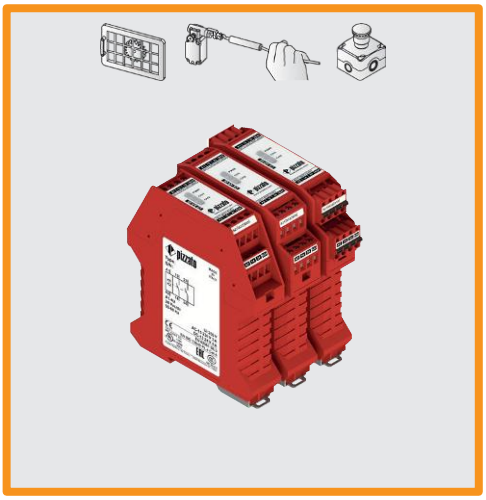

Module for emergency stops, end position monitoring for movable guards, OSSD semiconductor outputs and magnetic safety sensors

Main features

- For safety applications up to SIL 3/PL e
- Inputs: 1 or 2 channels, which can be connected to electromechanical contacts, magnetic safety sensors or OSSD solid-state outputs
- Outputs: relay, 2NO safety
- Input with configurable start: automatic, manual or monitored
- Supply voltage: 12 Vdc, 24 Vac/dc, 120 Vac, 230 Vac
- Possibility of parallel reset of several modules

Quality marks:

EC type examination certificate: IMQ CP 432 DM
UL approval: E131787
CCC approval: 2024010305656748
TÜV SÜD approval: Z10 18 05 75157 018
EAC approval: RU Д-IT.PA07.B.37848/24

Compliance with the requirements of:
Machinery Directive 2006/42/EC,
EMC Directive 2014/30/EU,
RoHS Directive 2011/65/EU.

In compliance with standards:
EN 60204-1, EN ISO 13855, EN ISO 14118, EN ISO 12100, EN ISO 13850, EN 60529, EN 61000-6-2, EN 61000-6-3, EN 61326-1, EN 60664-1, EN 60947-1, EN 60947-5-3, EN 61508-1, EN 61508-2, EN 61508-4, EN IEC 63000, EN ISO 13849-1, EN ISO 13849-2, EN 62061, UL 508, CSA C22.2 No. 14, GB/T14048.5

Technical data

Housing

Polyamide housing PA 66, self-extinguishing V0 acc. to UL 94	
Protection degree acc. to EN 60529:	IP40 (housing), IP20 (terminal strip)
Dimensions:	see page 135, design A

General data

Safety Integrity Level (SIL) up to:	Maximum SIL 3 acc. to EN 62061
Performance Level (PL) up to:	PL e acc. to EN ISO 13849-1
Safety category up to:	cat. 4 acc. to EN ISO 13849-1
Safety parameters:	See page 151
Ambient temperature:	-25°C…+55°C
Mechanical endurance:	>10 million operating cycles
Electrical endurance:	>100,000 operating cycles
Pollution degree:	external 3, internal 2
Rated impulse withstand voltage (U_{imp}):	4 kV
Rated insulation voltage (U_i):	250 V
Overvoltage category:	II

Power supply

Rated supply voltage (U_n):	12 Vdc 24 Vac/dc; 50…60 Hz 120 Vac; 50…60 Hz 230 Vac; 50…60 Hz
Max. DC residual ripple in DC:	10%
Supply voltage tolerance:	±15% of U_n for 24 Vac/dc, 120 Vac, 230 Vac -10% … +15% of U_n for 12 Vdc
Power consumption AC:	< 5 VA
Power consumption DC:	< 2 W

Control circuit

Protection against short circuits:	PTC resistance, Ih=0.5 A
PTC times:	response > 100 ms, reset > 3 s
Maximum resistance per input:	≤ 50 Ω (15 Ω)*
Current per input:	< 40 mA (< 70 mA)*
Min. duration of start impulse t_{MIN}:	> 100 ms
Response time t_A:	< 300 ms (220 ms)*
Release time t_{R1}:	< 20 ms (15 ms)*
Release time in absence of power supply t_R:	< 200 ms (50 ms)*
Simultaneity time t_C:	unlimited

* Version CS AR-08•U12

Output circuit

Output contacts:	2 NO safety contacts,
Contact type:	forcibly guided
Material of the contacts:	silver alloy
Maximum switching voltage:	230/240 Vac; 300 Vdc
Utilization categories for output contacts:	AC-15 (50 ... 60 Hz), 230 V / 3 A DC-13 (6 oper. cycles/min.), 24 V / 4 A
Maximum conventional free air thermal current per branch I_{th}:	6 A
Max. total current ΣI_{th}^2:	36 A^2
Minimum current:	10 mA
Contact resistance:	≤ 100 mΩ
External protection fuse:	4 A

The number and the load capacity of output contacts can be increased by using expansion modules or contactors. See pages 75-84.

Features approved by UL

Rated supply voltage (U_n):	12 Vdc, 24 Vac/dc; 50…60 Hz, 120 Vac; 50…60 Hz, 230 Vac; 50…60 Hz
Power consumption AC:	< 5 VA
Power consumption DC:	< 4 W

Electrical ratings:
- NO contacts: 230/240 Vac, 6 A general use, C300 pilot duty
- NC contacts: 230/240 Vac, 6 A resistive, B300 pilot duty

Notes:
- Use 60 or 75°C copper (Cu) conductor and wire size No. 30-12 AWG, stranded or solid.
- The terminal tightening torque of 5-7 lb in.
- Only for 12 Vdc and 24 Vac/dc versions: supply from remote Class 2 source or limited voltage limited energy.

- Utiliser des conducteurs en cuivre (Cu) 60 ou 75°C rigides ou flexibles de section 30-12 AWG.
- Couple de serrage des bornes de 5-7 Lb In.
- Seulement pour les versions 12 Vdc et 24 Vac/dc, alimenter avec sources de classes 2 ou avec tension limitée et énergie limitée.

Features approved by TÜV SÜD

Rated supply voltage (U_n): 24 Vac/dc ± 15%, 120 Vac ± 15%, 230 Vac ± 15%
Power consumption: 5 VA max AC, 2 W max DC
Rated operating current (max.): 4 A
Maximum switching load (max.): 1380 VA
Ambient temperature: -25°C … +55°C
Storage temperature: -25 °C … + 70°C
Protection degree: IP40 (housing), IP20 (terminal strip)
In compliance with standards: 2006/42/EC Machinery Directive, EN ISO 13849-1:2015 (up to Cat. 4 PL e), EN 60947-5-3:2013, EN 61508-1:2010 (up to SIL 3), EN 61508-2:2010 (up to SIL 3), EN 61508-4:2010 (up to SIL 3), EN 62061:2005/A2:2015 (up to SIL CL 3)

Code structure

CS AR-08V024

Connection type		Supply voltage	
V	Screw terminals	**U12**	12 Vdc
M	Connector with screw terminals	**024**	24 Vac/dc
X	Connector with spring terminals	**120**	120 Vac
		230	230 Vac

Safety module CS AR-08

Pin assignment

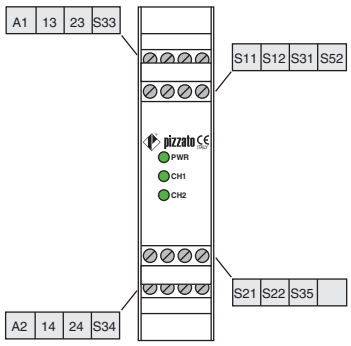

Internal wiring diagram

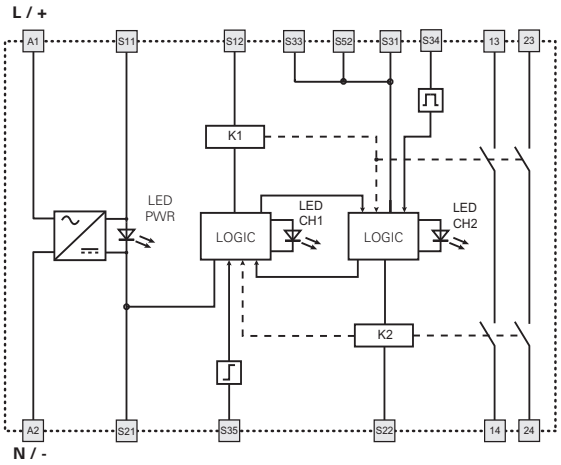

Function diagrams

Configuration with automatic start

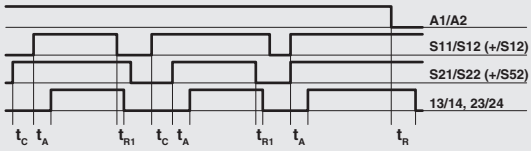

Configuration with monitored start

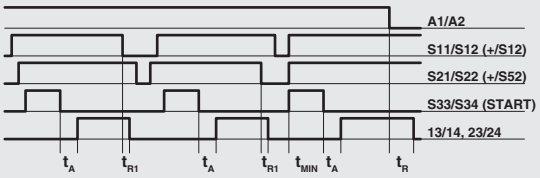

Configuration with manual start

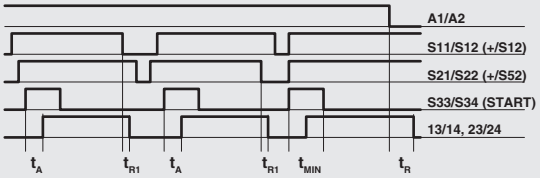

Legend:

t_{MIN}:	Min. duration of start impulse	t_{R1}:	Release time
t_c:	Simultaneity time	t_R:	Release time in absence of power supply
t_A:	Response time		

Notes:
The configurations with one channel are obtained taking into consideration the CH1 input only. In this case it is necessary to consider time t_{R1} referred to input CH1, time t_R referred to the supply, time t_A referred to input CH1 and to the start, and time t_{MIN} referred to the start.

Input configuration

OSSD semiconductor outputs (e.g. ST, NS, NG series or light barriers)

Input configuration with manual start

1 channel

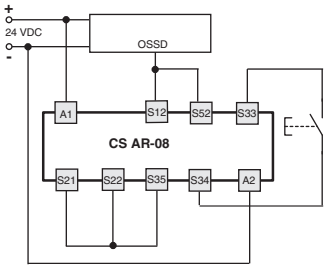

2 channels

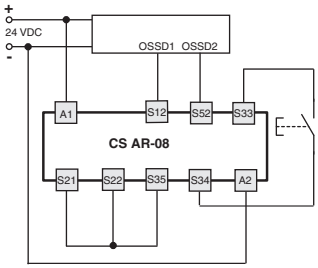

Emergency stop circuits

Input configuration with manual start

1 channel

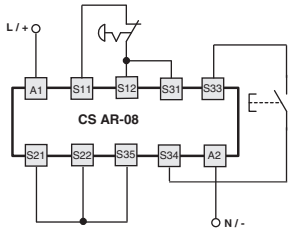

2 channels

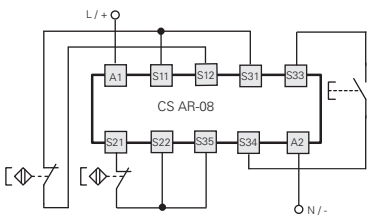

The diagram does not show the exact position of the terminals in the product

Automatic start

With regard to the indicated diagrams, bridge the start button between S33 and S34 in order to activate the automatic start module.

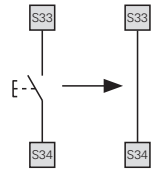

Monitored start

With regard to the indicated diagrams, remove the connection between the S22 and S35 terminals in order to activate the monitored start module.

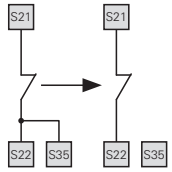

Monitoring of movable guards and magnetic safety sensors

The safety module can monitor emergency stop circuits, control circuits for movable guards as well as magnetic safety sensors. Replace the emergency stop contacts with switch contacts or sensor contacts.
The sensors can only be used in 2-channel configuration.

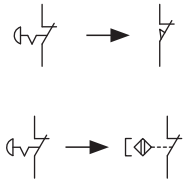

Application examples See page 85

Safety module **CS AR-20 / CS AR-21**

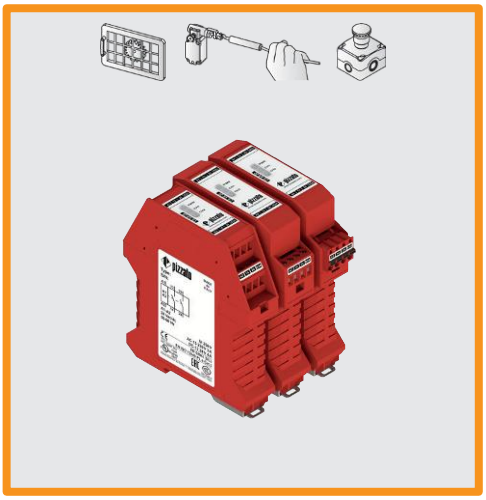

Module for emergency stops and end position monitoring for movable guards

Main features

- For safety applications up to SIL 3/PL e
- Inputs: 1 or 2 channels, which can be connected to electromechanical contacts
- Outputs: relay, 2NO safety
- Input with configurable start: automatic, manual (CS AR-20 only) or monitored (CS AR-21 only)
- Supply voltage: 24 Vac/dc, 120 Vac, 230 Vac

Quality marks:

EC type examination certificate: IMQ CP 432 DM
UL approval: E131787
CCC approval: 2024010305656748
EAC approval: RU Д-IT.PA07.B.37848/24

Compliance with the requirements of:
Machinery Directive 2006/42/EC,
EMC Directive 2014/30/EU,
RoHS Directive 2011/65/EU.

In compliance with standards:
EN 60204-1, EN ISO 13855, EN ISO 14118,
EN ISO 12100, EN ISO 13850, EN 60529, EN 61000-6-2,
EN 61000-6-3, EN 61326-1, EN 60664-1, EN 60947-1,
EN IEC 63000, EN ISO 13849-1, EN ISO 13849-2,
EN 62061, UL 508, CSA C22.2 No. 14, GB/T14048.5

Technical data

Housing

Polyamide housing PA 66, self-extinguishing V0 acc. to UL 94	
Protection degree acc. to EN 60529:	IP40 (housing), IP20 (terminal strip)
Dimensions:	see page 135, design A

General data

Safety Integrity Level (SIL) up to:	Maximum SIL 3 acc. to EN 62061
Performance Level (PL) up to:	PL e acc. to EN ISO 13849-1
Safety category up to:	cat. 3 acc. to EN ISO 13849-1
Safety parameters:	See page 151
Ambient temperature:	-25°C…+55°C
Mechanical endurance:	>10 million operating cycles
Electrical endurance:	>100,000 operating cycles
Pollution degree:	external 3, internal 2
Rated impulse withstand voltage (U_{imp}):	4 kV
Rated insulation voltage (U_i):	250 V
Overvoltage category:	II

Power supply

Rated supply voltage (U_n):	24 Vac/dc; 50…60 Hz 120 Vac; 50…60 Hz 230 Vac; 50…60 Hz
Max. DC residual ripple in DC:	10%
Supply voltage tolerance:	±15% of U_n
Power consumption AC:	< 5 VA
Power consumption DC:	< 2 W

Control circuit

Protection against short circuits:	PTC resistance, Ih=0.5 A
PTC times:	response > 100 ms, reset > 3 s
Maximum resistance per input:	≤ 50 Ω
Current per input:	< 70 mA
Min. duration of start impulse t_{MIN}:	> 100 ms
Response time t_A:	< 200 ms
Release time in absence of power supply t_R:	< 150 ms
Simultaneity time t_C:	unlimited

Output circuit

Output contacts:	2 NO safety contacts
Contact type:	forcibly guided
Material of the contacts:	silver alloy
Maximum switching voltage:	230/240 Vac; 300 Vdc
Utilization categories for output contacts:	AC-15 (50 ... 60 Hz), 230 V / 3 A DC-13 (6 oper. cycles/min.), 24 V / 4 A
Maximum conventional free air thermal current per branch I_{th}:	6 A
Max. total current ΣI_{th}^2:	36 A^2
Minimum current:	10 mA
Contact resistance:	≤ 100 mΩ
External protection fuse:	4 A

The number and the load capacity of output contacts can be increased by using expansion modules or contactors. See pages 75-84.

Code structure

CS AR-20V024

Start mode	
20	manual or automatic start
21	monitored start

Connection type	
V	Screw terminals
M	Connector with screw terminals
X	Connector with spring terminals

Supply voltage	
024	24 Vac/dc
120	120 Vac
230	230 Vac

Features approved by UL

Rated supply voltage (U_n):	24 Vac/dc; 50…60 Hz 120 Vac; 50…60 Hz 230 Vac; 50…60 Hz
Power consumption AC:	< 5 VA
Power consumption DC:	< 4 W

Electrical ratings:
- NO contacts: 230/240 Vac, 6 A general use, C300 pilot duty
- NC contacts: 230/240 Vac, 6 A resistive, B300 pilot duty

Notes:
- Use 60 or 75°C copper (Cu) conductor and wire size No. 30-12 AWG, stranded or solid.
- The terminal tightening torque of 5-7 lb in.
- Only for 24 Vac/dc versions: supply from remote Class 2 source or limited voltage limited energy.

- Utiliser des conducteurs en cuivre (Cu) 60 ou 75°C rigides ou flexibles de section 30-12 AWG.
- Couple de serrage des bornes de 5-7 Lb In.
- Seulement pour les versions 24 Vac/dc, alimenter avec sources de classes 2 ou avec tension limitée et énergie limitée.

Safety module CS AR-20 / CS AR-21

Pin assignment

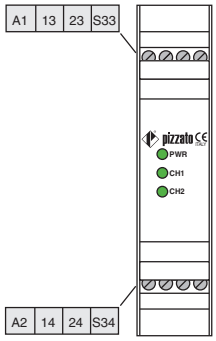

Internal wiring diagram

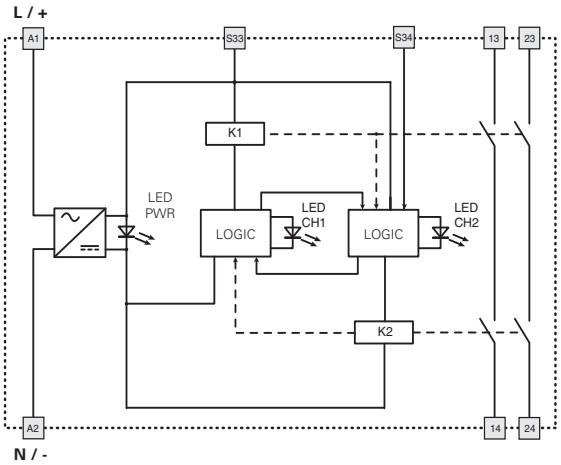

Function diagrams

Configuration with automatic start (CS AR-20 only)

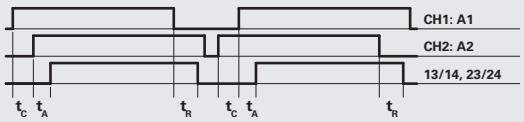

Configuration with monitored start (CS AR-21 only)

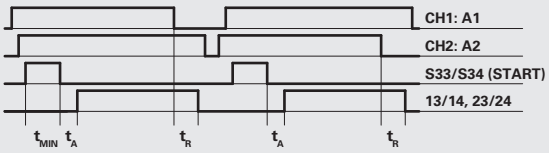

Configuration with manual start (CS AR-20 only)

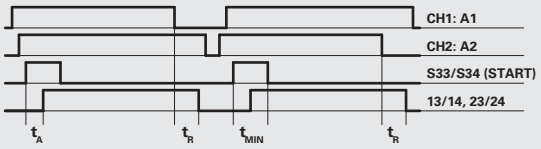

Legend:
t_{MIN}: Min. duration of start impulse
t_C: Simultaneity time
t_A: Response time
t_R: Release time in absence of power supply

Notes:
The configurations with one channel are obtained taking into consideration the CH1:A1 input only. In this case it is necessary to consider time t_R referred to input CH1:A1, time t_A referred to input CH1:A1 and to the start, and time t_{MIN} referred to the start.

Input configuration

Emergency stop circuits	
Input configuration with manual start	
1 channel	2 channels

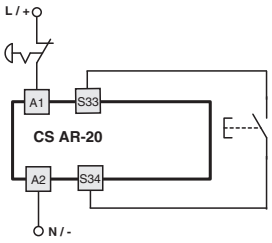

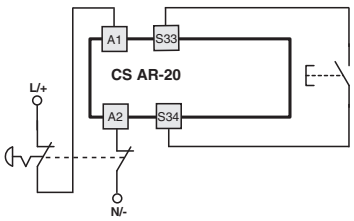

The diagram does not show the exact position of the terminals in the product

Automatic start

With regard to the indicated diagrams, bridge the start button between S33 and S34 in order to activate the automatic start module.

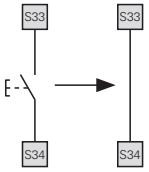

Monitored start

Use module CS AR-21 with the circuit diagrams for manual start.

Movable guard monitoring

The safety module can monitor emergency stop circuits and control circuits for movable guards. Replace the emergency stop contacts with the switch contacts.

Application examples See page 85

Safety module **CS AR-22 / CS AR-23**

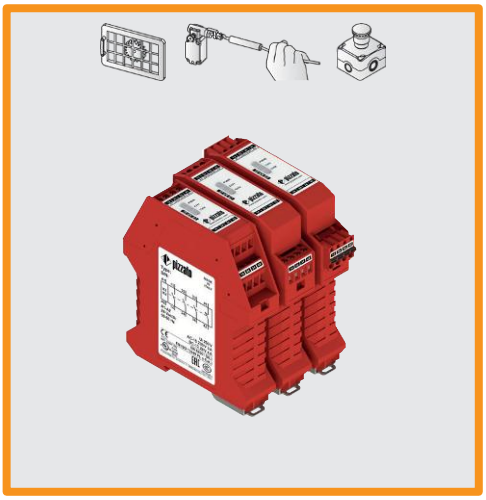

Module for emergency stops and end position monitoring for movable guards

Main features

- For safety applications up to SIL 3/PL e
- Inputs: 1 or 2 channels, which can be connected to electromechanical contacts
- Outputs: relay, 3NO safety, 1NC signalling
- Input with configurable start: automatic, manual (CS AR-22 only) or monitored (CS AR-23 only)
- Supply voltage: 24 Vac/dc, 120 Vac, 230 Vac

Quality marks:

EC type examination certificate: IMQ CP 432 DM
UL approval: E131787
CCC approval: 2024010305656748
EAC approval: RU Д-IT.PA07.B.37848/24

Compliance with the requirements of:
Machinery Directive 2006/42/EC,
EMC Directive 2014/30/EU,
RoHS Directive 2011/65/EU.

In compliance with standards:
EN 60204-1, EN ISO 13855, EN ISO 14118,
EN ISO 12100, EN ISO 13850, EN 60529, EN 61000-6-2,
EN 61000-6-3, EN 61326-1, EN 60664-1, EN 60947-1,
EN IEC 63000, EN ISO 13849-1, EN ISO 13849-2,
EN 62061, UL 508, CSA C22.2 No. 14, GB/T14048.5

Technical data

Housing

Polyamide housing PA 66, self-extinguishing V0 acc. to UL 94	
Protection degree acc. to EN 60529:	IP40 (housing), IP20 (terminal strip)
Dimensions:	see page 135, design A

General data

Safety Integrity Level (SIL) up to:	Maximum SIL 3 acc. to EN 62061
Performance Level (PL) up to:	PL e acc. to EN ISO 13849-1
Safety category up to:	cat. 3 acc. to EN ISO 13849-1
Safety parameters:	See page 151
Ambient temperature:	-25°C…+55°C
Mechanical endurance:	>10 million operating cycles
Electrical endurance:	>100,000 operating cycles
Pollution degree:	external 3, internal 2
Rated impulse withstand voltage (U_{imp}):	4 kV
Rated insulation voltage (U_i):	250 V
Overvoltage category:	II

Power supply

Rated supply voltage (U_n):	24 Vac/dc; 50…60 Hz 120 Vac; 50…60 Hz 230 Vac; 50…60 Hz
Max. DC residual ripple in DC:	10%
Supply voltage tolerance:	±15% of U_n
Power consumption AC:	< 5 VA
Power consumption DC:	< 2 W

Control circuit

Protection against short circuits:	PTC resistance, Ih=0.5 A
PTC times:	response > 100 ms, reset > 3 s
Maximum resistance per input:	≤ 50 Ω
Current per input:	< 70 mA
Min. duration of start impulse t_{MIN}:	> 100 ms
Response time t_A:	< 50 ms
Release time in absence of power supply t_R:	< 75 ms
Simultaneity time t_C:	unlimited

Output circuit

Output contacts:	3 NO safety contacts 1 NC auxiliary contact
Contact type:	forcibly guided
Material of the contacts:	silver alloy
Maximum switching voltage:	230/240 Vac; 300 Vdc
Utilization categories for output contacts:	AC-15 (50 ... 60 Hz), 230 V / 3 A DC-13 (6 oper. cycles/min.), 24 V / 4 A
Maximum conventional free air thermal current per branch I_{th}:	6 A
Max. total current ΣI_{th}^2:	80 A^2
Minimum current:	10 mA
Contact resistance:	≤ 100 mΩ
External protection fuse:	4 A

The number and the load capacity of output contacts can be increased by using expansion modules or contactors. See pages 75-84.

Code structure

CS AR-22V024

Start mode	
22	manual or automatic start
23	monitored start

Connection type	
V	Screw terminals
M	Connector with screw terminals
X	Connector with spring terminals

Supply voltage	
024	24 Vac/dc
120	120 Vac
230	230 Vac

Features approved by UL

Rated supply voltage (U_n):	24 Vac/dc; 50…60 Hz 120 Vac; 50…60 Hz 230 Vac; 50…60 Hz
Power consumption AC:	< 5 VA
Power consumption DC:	< 4 W

Electrical ratings:
- NO contacts: 230/240 Vac, 6 A general use, C300 pilot duty
- NC contacts: 230/240 Vac, 6 A resistive, B300 pilot duty

Notes:
- Use 60 or 75°C copper (Cu) conductor and wire size No. 30-12 AWG, stranded or solid.
- The terminal tightening torque of 5-7 lb in.
- Only for 24 Vac/dc versions: supply from remote Class 2 source or limited voltage limited energy.

- Utiliser des conducteurs en cuivre (Cu) 60 ou 75°C rigides ou flexibles de section 30-12 AWG.
- Couple de serrage des bornes de 5-7 Lb In.
- Seulement pour les versions 24 Vac/dc, alimenter avec sources de classes 2 ou avec tension limitée et énergie limitée.

Safety module CS AR-22 / CS AR-23

Pin assignment

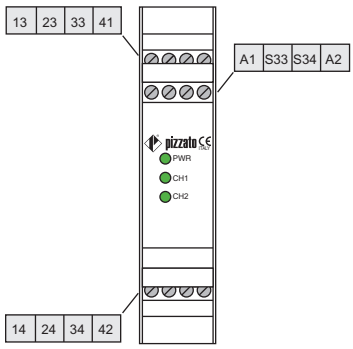

Function diagrams

Configuration with automatic start (CS AR-22 only)

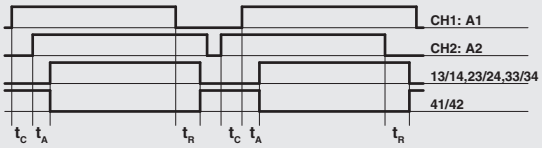

Configuration with monitored start (CS AR-23 only)

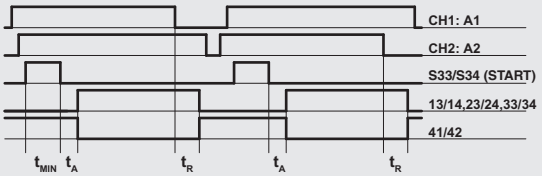

Internal wiring diagram

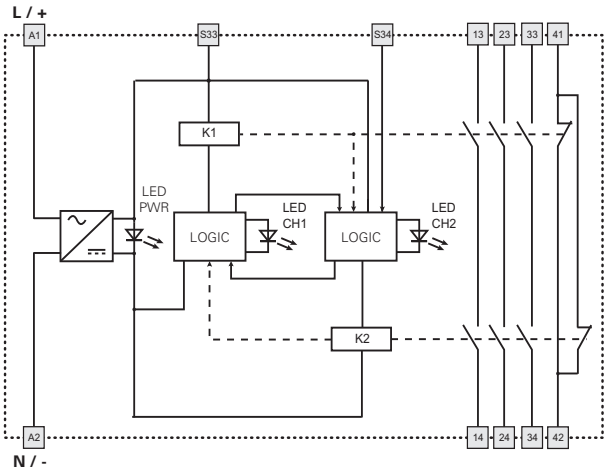

Configuration with manual start (CS AR-22 only)

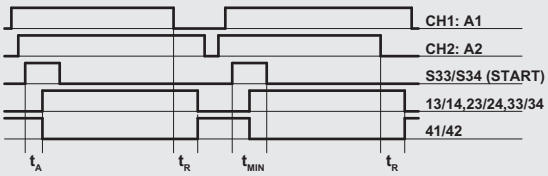

Legend:

t_{MIN}: Min. duration of start impulse
t_C: Simultaneity time
t_A: Response time
t_R: Release time in absence of power supply

Notes:
The configurations with one channel are obtained taking into consideration the CH1:A1 input only. In this case it is necessary to consider time t_R referred to input CH1:A1, time t_A referred to input CH1:A1 and to the start, and time t_{MIN} referred to the start.

Input configuration

Emergency stop circuits	
Input configuration with manual start	
1 channel	2 channels

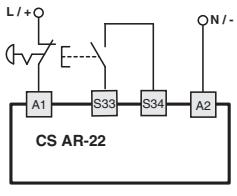

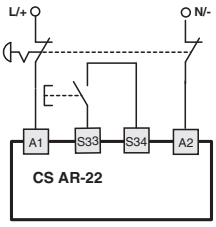

The diagram does not show the exact position of the terminals in the product

Automatic start

With regard to the indicated diagrams, bridge the start button between S33 and S34 in order to activate the automatic start module.

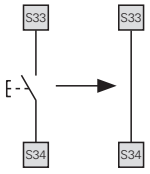

Monitored start

Use module CS AR-23 with the circuit diagrams for manual start.

Movable guard monitoring

The safety module can monitor emergency stop circuits and control circuits for movable guards. Replace the emergency stop contacts with the switch contacts.

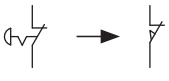

Application examples See page 85

Safety module **CS AR-24** / **CS AR-25**

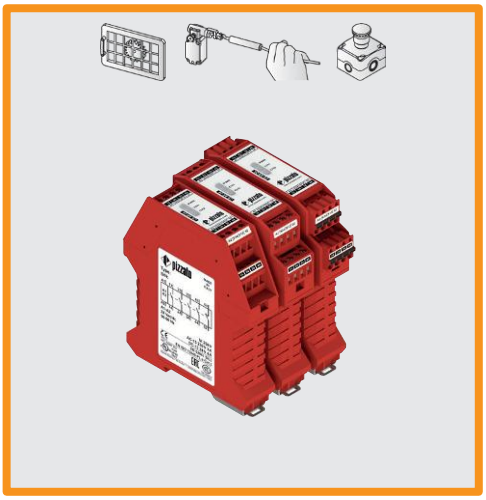

Module for emergency stops and end position monitoring for movable guards

Main features

- For safety applications up to SIL 3/PL e
- Inputs: 1 or 2 channels, which can be connected to electromechanical contacts
- Outputs: relay, 4NO safety, 1NC signalling
- Input with configurable start: automatic, manual (CS AR-24 only) or monitored (CS AR-25 only)
- Supply voltage: 24 Vac/dc

Quality marks:

EC type examination certificate: IMQ CP 432 DM
UL approval: E131787
CCC approval: 2024010305656748
EAC approval: RU Д-IT.PA07.B.37848/24

Compliance with the requirements of:
Machinery Directive 2006/42/EC,
EMC Directive 2014/30/EU,
RoHS Directive 2011/65/EU.

In compliance with standards:
EN 60204-1, EN ISO 13855, EN ISO 14118, EN ISO 12100, EN ISO 13850, EN 60529, EN 61000-6-2, EN 61000-6-3, EN 61326-1, EN 60664-1, EN 60947-1, EN IEC 63000, EN ISO 13849-1, EN ISO 13849-2, EN 62061, UL 508, CSA C22.2 No. 14, GB/T14048.5

Technical data

Housing

Polyamide housing PA 66, self-extinguishing V0 acc. to UL 94	
Protection degree acc. to EN 60529:	IP40 (housing), IP20 (terminal strip)
Dimensions:	see page 135, design A

General data

Safety Integrity Level (SIL) up to:	Maximum SIL 3 acc. to EN 62061
Performance Level (PL) up to:	PL e acc. to EN ISO 13849-1
Safety category up to:	cat. 3 acc. to EN ISO 13849-1
Safety parameters:	See page 151
Ambient temperature:	-25°C…+55°C
Mechanical endurance:	>10 million operating cycles
Electrical endurance:	>100,000 operating cycles
Pollution degree:	external 3, internal 2
Rated impulse withstand voltage (U_{imp}):	4 kV
Rated insulation voltage (U_i):	250 V
Overvoltage category:	II

Power supply

Rated supply voltage (U_n):	24 Vac/dc; 50…60 Hz
Max. DC residual ripple in DC:	10%
Supply voltage tolerance:	±15% of U_n
Power consumption AC:	< 5 VA
Power consumption DC:	< 2 W

Control circuit

Protection against short circuits:	PTC resistance, Ih=0.5 A
PTC times:	response > 100 ms, reset > 3 s
Maximum resistance per input:	≤ 50 Ω
Current per input:	< 30 mA
Min. duration of start impulse t_{MIN}:	> 100 ms
Response time t_A:	< 85 ms
Release time t_{R1}:	< 40 ms
Release time in absence of power supply t_R:	< 170 ms
Simultaneity time t_C:	unlimited

Output circuit

Output contacts:	4 NO safety contacts 1 NC auxiliary contact
Contact type:	forcibly guided
Material of the contacts:	silver alloy
Maximum switching voltage:	230/240 Vac; 300 Vdc
Utilization categories for output contacts:	AC-15 (50 ... 60 Hz), 230 V / 3 A DC-13 (6 oper. cycles/min.), 24 V / 4 A
Maximum conventional free air thermal current per branch I_{th}:	6 A
Max. total current ΣI_{th}^2:	72 A^2
Minimum current:	10 mA
Contact resistance:	≤ 100 mΩ
External protection fuse:	4 A

The number and the load capacity of output contacts can be increased by using expansion modules or contactors. See pages 75-84.

Code structure

CS AR-24V024

Start mode	
24	manual or automatic start
25	monitored start

Connection type	
V	Screw terminals
M	Connector with screw terminals
X	Connector with spring terminals

Supply voltage	
024	24 Vac/dc

Features approved by UL

Rated supply voltage (U_n):	24 Vac/dc; 50…60 Hz
Power consumption AC:	< 5 VA
Power consumption DC:	< 4 W

Electrical ratings:
- NO contacts: 230/240 Vac, 6 A general use, C300 pilot duty
- NC contacts: 230/240 Vac, 6 A resistive, B300 pilot duty

Notes:
- Use 60 or 75°C copper (Cu) conductor and wire size No. 30-12 AWG, stranded or solid.
- The terminal tightening torque of 5-7 lb in.
- Only for 24 Vac/dc versions: supply from remote Class 2 source or limited voltage limited energy.

- Utiliser des conducteurs en cuivre (Cu) 60 ou 75°C rigides ou flexibles de section 30-12 AWG.
- Couple de serrage des bornes de 5-7 Lb In.
- Seulement pour les versions 24 Vac/dc, alimenter avec sources de classes 2 ou avec tension limitée et énergie limitée.

Safety module CS AR-24 / CS AR-25

Pin assignment

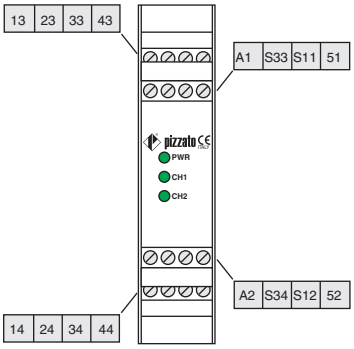

Function diagrams

Configuration with automatic start (CS AR-24 only)

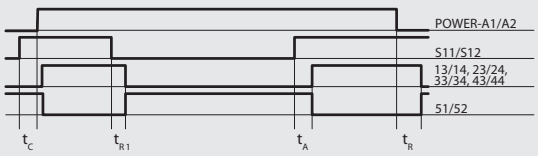

Configuration with monitored start (CS AR-25 only)

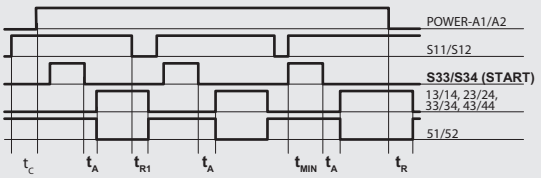

Internal wiring diagram

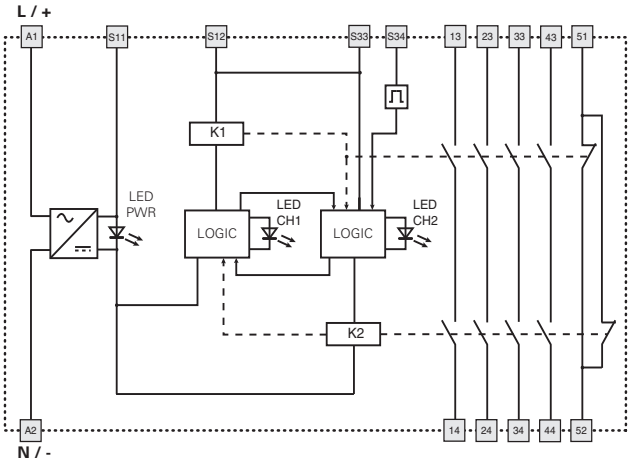

Configuration with manual start (CS AR-24 only)

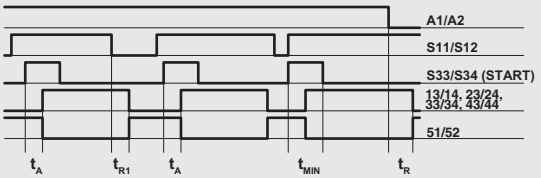

Legend:

t_{MIN}:	Min. duration of start impulse	t_{R1}:	Release time
t_C:	Simultaneity time	t_R:	Release time in absence of power supply
t_A:	Response time		

Notes:
The configurations with one channel are obtained taking into consideration the S11/S12 input only. In this case it is necessary to consider time t_{R1} referred to input S11/S12, time t_R referred to the supply, time t_A referred to input S11/S12 and to the start, and time t_{MIN} referred to the start.

Input configuration

Emergency stop circuits	
Input configuration with manual start	
1 channel	2 channels

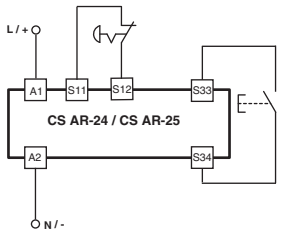

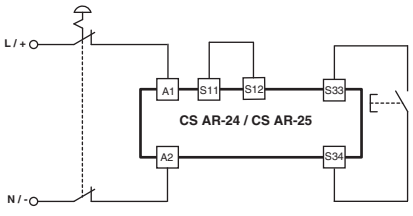

The diagram does not show the exact position of the terminals in the product

Automatic start

With regard to the indicated diagrams, bridge the start button between S33 and S34 in order to activate the automatic start module.

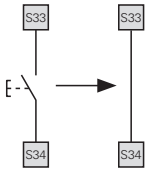

Monitored start

Use module CS AR-25 with the circuit diagrams for manual start.

Movable guard monitoring

The safety module can monitor emergency stop circuits and control circuits for movable guards. Replace the emergency stop contacts with the switch contacts.

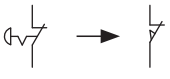

Application examples See page 85

Safety module **CS AR-40 / CS AR-41**

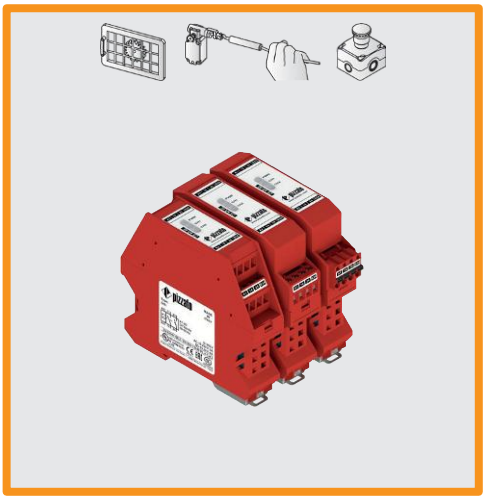

Module for emergency stops and end position monitoring for movable guards

Main features

- For safety applications up to SIL 2/PL d
- Inputs: 1 or 2 channels, which can be connected to electromechanical contacts
- Outputs: relay, 2NO safety
- Input with configurable start: automatic, manual (CS AR-40 only) or monitored (CS AR-41 only)
- Supply voltage: 24 Vac/dc

Quality marks:

EC type examination certificate: IMQ CP 432 DM
UL approval: E131787
CCC approval: 2024010305656748
EAC approval: RU Д-IT.PA07.B.37848/24

Compliance with the requirements of:
Machinery Directive 2006/42/EC,
EMC Directive 2014/30/EU,
RoHS Directive 2011/65/EU.

In compliance with standards:
EN 60204-1, EN ISO 13855, EN ISO 14118,
EN ISO 12100, EN ISO 13850, EN 60529, EN 61000-6-2,
EN 61000-6-3, EN 61326-1, EN 60664-1, EN 60947-1,
EN IEC 63000, EN ISO 13849-1, EN ISO 13849-2,
EN IEC 62061, UL 508, CSA C22.2 No. 14, GB/T14048.5

Technical data

Housing

Polyamide housing PA 66, self-extinguishing V0 acc. to UL 94	
Protection degree acc. to EN 60529:	IP40 (housing), IP20 (terminal strip)
Dimensions:	see page 135, design D

General data

Safety Integrity Level (SIL) up to:	Maximum SIL 3 acc. to EN 62061
Performance Level (PL) up to:	PL e acc. to EN ISO 13849-1
Safety category up to:	cat. 3 acc. to EN ISO 13849-1
Safety parameters:	See page 151
Ambient temperature:	-25°C…+55°C
Mechanical endurance:	>10 million operating cycles
Electrical endurance:	>100,000 operating cycles
Pollution degree:	external 3, internal 2
Rated impulse withstand voltage (U_{imp}):	4 kV
Rated insulation voltage (U_i):	250 V
Overvoltage category:	II

Power supply

Rated supply voltage (U_n):	24 Vac/dc; 50…60 Hz
Max. DC residual ripple in DC:	10%
Supply voltage tolerance:	±15% of U_n
Power consumption AC:	< 5 VA
Power consumption DC:	< 2 W

Control circuit

Protection against short circuits:	PTC resistance, Ih=0.5 A
PTC times:	response > 100 ms, reset > 3 s
Maximum resistance per input:	≤ 50 Ω
Current per input:	70 mA (typical)
Min. duration of start impulse t_{MIN}:	> 100 ms
Response time t_A:	< 50 ms
Release time in absence of power supply t_R:	< 150 ms
Simultaneity time t_C:	unlimited

Output circuit

Output contacts:	2 NO safety contacts
Contact type:	forcibly guided
Material of the contacts:	silver alloy
Maximum switching voltage:	230/240 Vac; 300 Vdc
Utilization categories for output contacts:	AC-15 (50 ... 60 Hz), 230 V / 3 A DC-13 (6 oper. cycles/min.), 24 V / 4 A
Maximum conventional free air thermal current per branch I_{th}:	6 A
Max. total current Σ I_{th}^2:	36 A²
Minimum current:	10 mA
Contact resistance:	≤ 100 mΩ
External protection fuse:	4 A

The number and the load capacity of output contacts can be increased by using expansion modules or contactors. See pages 75-84.

Code structure

CS AR-40V024

Start mode	
40	manual or automatic start
41	monitored start

Connection type	
V	Screw terminals
M	Connector with screw terminals
X	Connector with spring terminals

Supply voltage	
024	24 Vac/dc

Features approved by UL

Rated supply voltage (U_n):	24 Vac/dc; 50…60 Hz
Power consumption AC:	< 5 VA
Power consumption DC:	< 4 W

Electrical ratings:
- NO contacts: 230/240 Vac, 6 A general use, C300 pilot duty
- NC contacts: 230/240 Vac, 6 A resistive, B300 pilot duty

Notes:
- Use 60 or 75°C copper (Cu) conductor and wire size No. 30-12 AWG, stranded or solid.
- The terminal tightening torque of 5-7 lb in.
- Only for 24 Vac/dc versions: supply from remote Class 2 source or limited voltage limited energy.

- Utiliser des conducteurs en cuivre (Cu) 60 ou 75°C rigides ou flexibles de section 30-12 AWG.
- Couple de serrage des bornes de 5-7 Lb In.
- Seulement pour les versions 24 Vac/dc, alimenter avec sources de classes 2 ou avec tension limitée et énergie limitée.

Safety module CS AR-40 / CS AR-41

Pin assignment

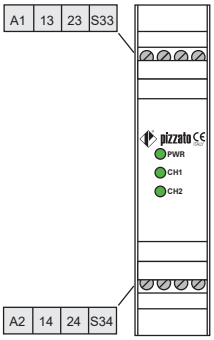

Function diagrams

Configuration with automatic start (CS AR-40 only)

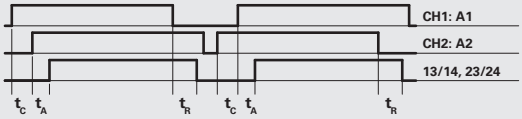

Configuration with monitored start (CS AR-41 only)

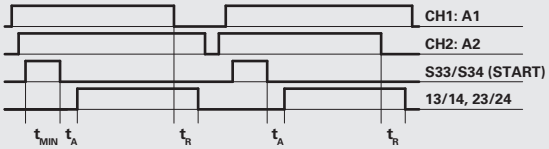

Configuration with manual start (CS AR-40 only)

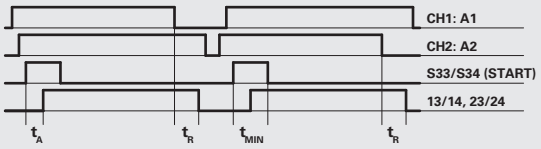

Legend:

t_{MIN}: Min. duration of start impulse
t_C: Simultaneity time
t_A: Response time
t_R: Release time in absence of power supply

Notes:
The configurations with one channel are obtained taking into consideration the CH1:A1 input only. In this case it is necessary to consider time t_R referred to input CH1:A1, time t_A referred to input CH1:A1 and to the start, and time t_{MIN} referred to the start.

Internal wiring diagram

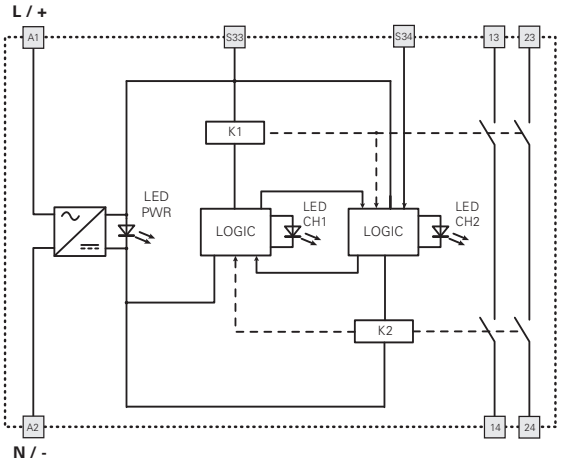

Input configuration

Emergency stop circuits	
Input configuration with manual start	
1 channel	2 channels

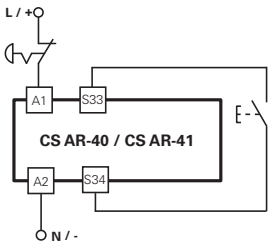

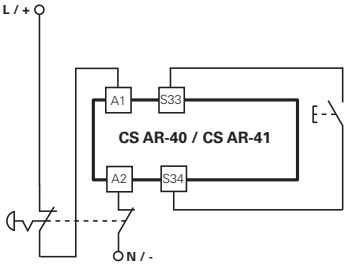

The diagram does not show the exact position of the terminals in the product

Automatic start

With regard to the indicated diagram, bridge the start button between S33 and S34 in order to activate the automatic start module.

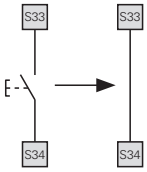

Monitored start

Use module CS AR-41 with the circuit diagrams for manual start.

Movable guard monitoring

The safety module can monitor emergency stop circuits and control circuits for movable guards. Replace the emergency stop contacts with the switch contacts.

Safety module **CS AR-46**

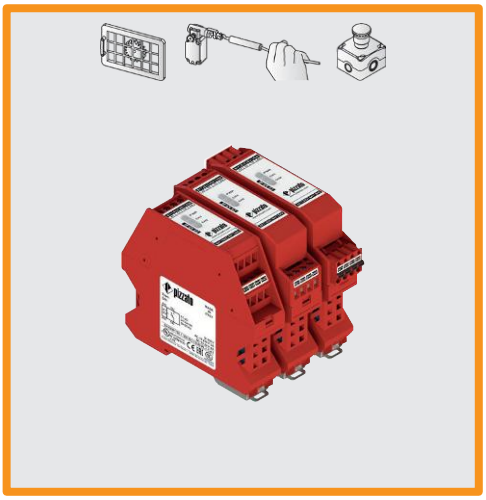

Module for emergency stop, end position monitoring for movable guards, and magnetic safety sensors and devices

Main features

- For safety applications up to SIL 1/PL c
- Inputs: 1 or 2 channels, which can be connected to electromechanical contacts or magnetic safety sensors
- Outputs: relay, 1NO safety
- Supply voltage: 24 Vac/dc

Quality marks:

UL approval:	E131787
CCC approval:	2024010305656748
EAC approval:	RU Д-IT.PA07.B.37848/24

Compliance with the requirements of:
Machinery Directive 2006/42/EC,
EMC Directive 2014/30/EU,
RoHS Directive 2011/65/EU.

In compliance with standards:
EN 60204-1, EN ISO 13855, EN ISO 14118,
EN ISO 12100, EN ISO 13850, EN 60529, EN 61000-6-2,
EN 61000-6-3, EN 61326-1, EN 60664-1, EN 60947-1,
EN IEC 63000, EN ISO 13849-1, EN ISO 13849-2,
EN 62061, UL 508, CSA C22.2 No. 14, GB/T14048.5

Technical data

Housing

Polyamide housing PA 66, self-extinguishing V0 acc. to UL 94	
Protection degree acc. to EN 60529:	IP40 (housing), IP20 (terminal strip)
Dimensions:	see page 135, design D

General data

Safety Integrity Level (SIL) up to:	Maximum SIL 1 acc. to EN 62061
Performance Level (PL) up to:	PL c acc. to EN ISO 13849-1
Safety category up to:	cat. 1 acc. to EN ISO 13849-1
Safety parameters:	See page 151
Ambient temperature:	-25°C…+55°C
Mechanical endurance:	>10 million operating cycles
Electrical endurance:	>100,000 operating cycles
Pollution degree:	external 3, internal 2
Rated impulse withstand voltage (U_{imp}):	4 kV
Rated insulation voltage (U_i):	250 V
Overvoltage category:	II

Power supply

Rated supply voltage (U_n):	24 Vac/dc; 50…60 Hz
Max. DC residual ripple in DC:	10%
Supply voltage tolerance:	-10% … +15% of U_n
Power consumption AC:	< 5 VA
Power consumption DC:	< 2 W

Control circuit

Protection against short circuits:	PTC resistance, Ih=0.5 A
PTC times:	response > 100 ms, reset > 3 s
Maximum resistance per input:	≤ 50 Ω
Current per input:	< 20 mA
Response time t_A:	< 20 ms
Release time t_{R1}:	< 20 ms
Release time in absence of power supply t_R:	< 150 ms
Simultaneity time t_C:	unlimited

Output circuit

Output contacts:	1 NO safety contact
Material of the contacts:	silver alloy
Maximum switching voltage:	230/240 Vac; 300 Vdc
Utilization categories for output contacts:	AC-15 (50 ... 60 Hz), 230 V / 3 A DC-13 (6 oper. cycles/min.), 24 V / 4 A
Maximum conventional free air thermal current per branch I_{th}:	6 A
Minimum current:	10 mA
Contact resistance:	≤ 100 mΩ
External protection fuse:	4 A

The number and the load capacity of output contacts can be increased by using expansion modules or contactors. See pages 75-84.

Code structure

CS AR-46V024

Connection type	
V	Screw terminals
M	Connector with screw terminals
X	Connector with spring terminals

Supply voltage	
024	24 Vac/dc

Features approved by UL

Rated supply voltage (U_n):	24 Vac/dc; 50…60 Hz
Power consumption AC:	< 5 VA
Power consumption DC:	< 4 W

Electrical ratings:
- NO contacts: 230/240 Vac, 6 A general use, C300 pilot duty
- NC contacts: 230/240 Vac, 6 A resistive, B300 pilot duty

Notes:
- Use 60 or 75°C copper (Cu) conductor and wire size No. 30-12 AWG, stranded or solid.
- The terminal tightening torque of 5-7 lb in.
- Only for 24 Vac/dc versions: supply from remote Class 2 source or limited voltage limited energy.

- Utiliser des conducteurs en cuivre (Cu) 60 ou 75°C rigides ou flexibles de section 30-12 AWG.
- Couple de serrage des bornes de 5-7 Lb In.
- Seulement pour les versions 24 Vac/dc, alimenter avec sources de classes 2 ou avec tension limitée et énergie limitée.

Safety module CS AR-46

Pin assignment

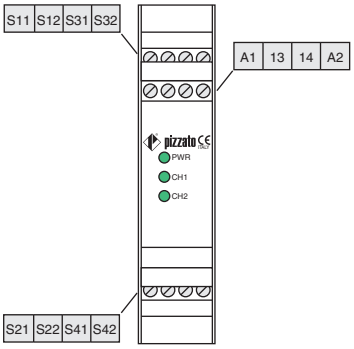

Function diagrams

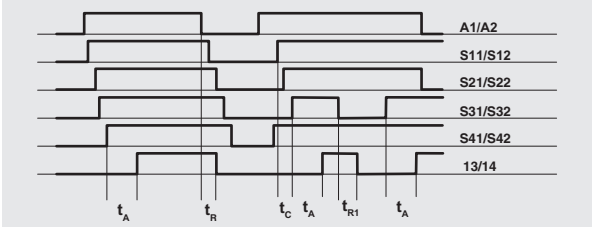

Legend:
t_C: Simultaneity time
t_A: Response time
t_{R1}: Release time
t_R: Release time in absence of power supply

Internal wiring diagram

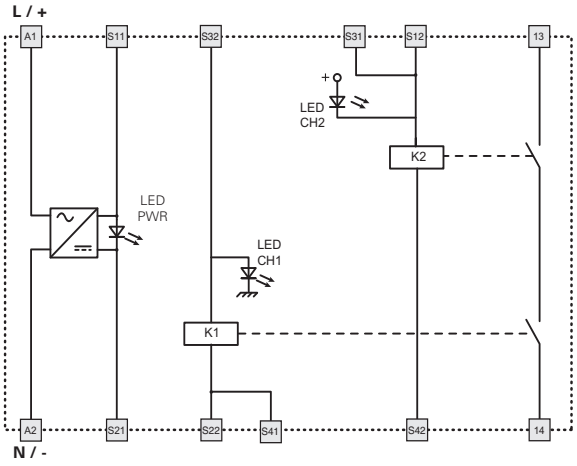

Input configuration

Emergency stop circuits		
Input configuration with automatic start		
2 channels and 1 emergency stop button	2 channels and 2 emergency stop buttons	2 channels and 4 switches

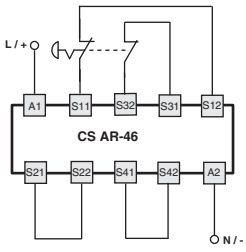

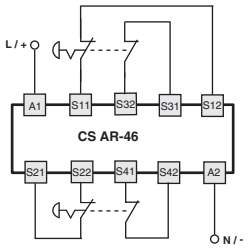

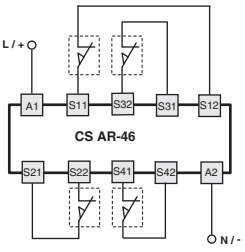

Monitoring of movable guards and magnetic safety sensors

The safety module can monitor emergency stop circuits, control circuits for movable guards as well as magnetic safety sensors. Replace the emergency stop contacts with switch contacts or sensor contacts. **The sensors can only be used in 2-channel configuration.**

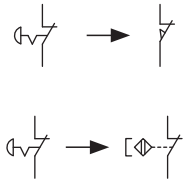

1 channel and 1 emergency stop button

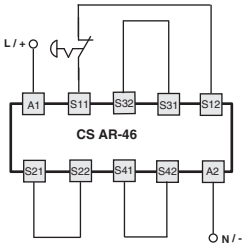

Safety module **CS AR-91**

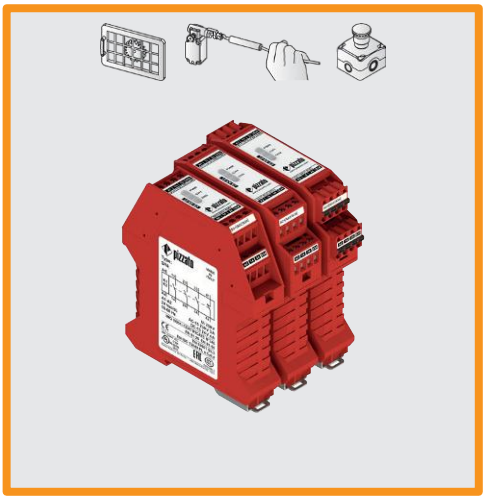

Module for emergency stops, end position monitoring for movable guards and magnetic safety sensors

Main features

- For safety applications up to SIL 3/PL e
- Inputs: 1 or 2 channels, which can be connected to electromechanical contacts or magnetic safety sensors
- Connection of input channels of opposite potentials
- Outputs: relay, 2NO safety, 1NO opto-decoupled signalling
- Input with configurable start: automatic, manual or monitored
- Supply voltage: 24 Vac/dc
- Insensitive to voltage dips

Quality marks:

EU-type examination certificate: IMQ no. 340
(Lift Directive)
EC type examination certificate: IMQ CP 432 DM
(Machinery Directive)

UL approval:	E131787
CCC approval:	2024010305656748
EAC approval:	RU Д-IT.PA07.B.37848/24

Compliance with the requirements of:
Machinery Directive 2006/42/EC,
EMC Directive 2014/30/EU,
RoHS Directive 2011/65/EU,
Lifts Directive 2014/33/EU

In compliance with standards:
EN 60204-1, EN ISO 13855, EN ISO 14118,
EN ISO 12100, EN ISO 13850, EN 60529, EN 61000-6-2,
EN 61000-6-3, EN 61326-1, EN 60664-1, EN 60947-1,
EN IEC 63000, EN ISO 13849-1, EN ISO 13849-2,
EN 62061, UL 508, CSA C22.2 No. 14,
GB/T14048.5, EN 81-20, EN 81-50

Technical data

Housing

Polyamide housing PA 66, self-extinguishing V0 acc. to UL 94	
Protection degree acc. to EN 60529:	IP40 (housing), IP20 (terminal strip)
Dimensions:	see page 135, design A

General data

Safety Integrity Level (SIL) up to:	Maximum SIL 3 acc. to EN 62061
Performance Level (PL) up to:	PL e acc. to EN ISO 13849-1
Safety category up to:	cat. 4 acc. to EN ISO 13849-1
Safety parameters:	See page 151
Ambient temperature:	-25°C…+55°C
Mechanical endurance:	>10 million operating cycles
Electrical endurance:	>100,000 operating cycles
Pollution degree:	external 3, internal 2
Rated impulse withstand voltage (U_{imp}):	4 kV
Rated insulation voltage (U_i):	250 V
Overvoltage category:	II

Power supply

Rated supply voltage (U_n):	24 Vac/dc; ±15%; 50…60 Hz
Max. DC residual ripple in DC:	10%
Power consumption AC:	< 5 VA
Power consumption DC:	< 2.5 W

Control circuit

Protection against short circuits:	PTC resistance, Ih=0.5 A
PTC response time:	response > 100 ms, reset > 3 s
Maximum resistance per input:	≤ 50 Ω
Current per input:	< 40 mA
Min. duration of start impulse t_{MIN}:	> 50 ms
Response time t_A:	< 120 ms
Release time t_{R1}:	< 20 ms
Release time in absence of power supply t_R:	< 65 ms
Simultaneity time t_C:	unlimited
Response time starting from application of the supply:	< 300 ms

Auxiliary signalling circuit

Auxiliary output (Y43-Y44):	1NO opto-decoupled
Rated operating voltage (U_e):	24 Vdc
Rated operating current (I_e):	25 mA
Rated impulse withstand voltage (U_{imp}):	4 kV
Release time t_{R2}:	< 1 ms

Output circuit

Output contacts:	2 NO safety contacts,
Contact type:	forcibly guided
Material of the contacts:	silver alloy
Maximum switching voltage:	230/240 Vac; 300 Vdc
Utilization categories for output contacts:	AC-15 (50 ... 60 Hz), 230 V / 3 A
	DC-13 (6 oper. cycles/min.), 24 V / 4 A
Maximum conventional free air thermal current per branch I_{th}:	6 A
Max. total current Σ I_{th}^2:	36 A^2
Minimum current:	10 mA
Contact resistance:	≤ 100 mΩ
External protection fuse:	4 A type F

The number and the load capacity of output contacts can be increased by using expansion modules or contactors. See pages 75-84.

Code structure

CS AR-91V024

Connection type	
V	Screw terminals
M	Connector with screw terminals
X	Connector with spring terminals

Supply voltage	
024	24 Vac/dc

Features approved by UL

Rated supply voltage (U_n):	24 Vac/dc; 50…60 Hz
Power consumption AC:	< 5 VA
Power consumption DC:	< 4 W

Electrical ratings:
- NO contacts: 230/240 Vac, 6 A general use, C300 pilot duty
- NC contacts: 230/240 Vac, 6 A resistive, B300 pilot duty

Notes:
- Use 60 or 75°C copper (Cu) conductor and wire size No. 30-12 AWG, stranded or solid.
- The terminal tightening torque of 5-7 lb in.
- Only for 24 Vac/dc versions: supply from remote Class 2 source or limited voltage limited energy.

- Utiliser des conducteurs en cuivre (Cu) 60 ou 75°C rigides ou flexibles de section 30-12 AWG.
- Couple de serrage des bornes de 5-7 Lb In.
- Seulement pour les versions 24 Vac/dc, alimenter avec sources de classes 2 ou avec tension limitée et énergie limitée.

Safety module CS AR-91

Pin assignment

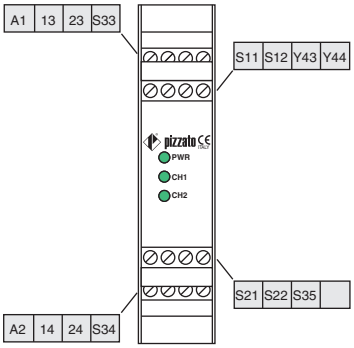

Voltage dips, short interruptions and voltage variations

The CS AR-91 safety module has a built-in voltage drop sensor which serves to protect and safeguard the internal state of the safety relays, in the event of dips or short voltage interruptions. This is to prevent unwanted switching states in relation to the state of the inputs from occurring. When voltage is restored, the device continues to operate with a switching state that is consistent with the input signals. The safety module retains its normal function during voltage dips and brief interruptions; for longer voltage interruptions, the safety outputs open and reset themselves automatically during an automatic start if voltage is restored or – in the case of a manual or monitored start – require that the system be reset by the operator.

Function diagrams

Configuration with automatic start

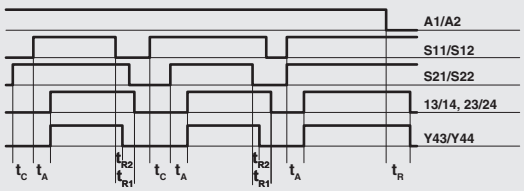

Configuration with monitored start

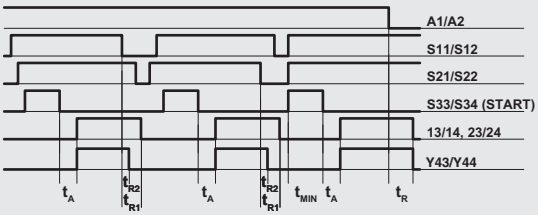

Configuration with manual start

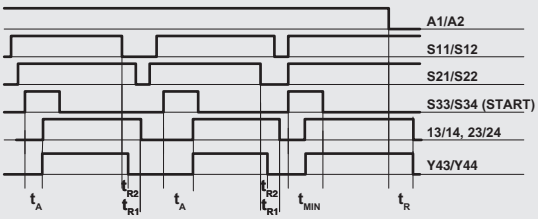

Legend:

t_{MIN}:	Min. duration of start impulse	t_{R2}:	Release time
t_c:	Simultaneity time	t_{R1}:	Release time
t_A:	Response time	t_R:	Release time in absence of power supply

Notes:
The configurations with one channel are obtained taking into consideration the S11/S12 input only. In this case it is necessary to consider time t_{R1} referred to input S11/S12, time t_R referred to the supply, time t_A referred to input S11/S12 and to the start, and time t_{MIN} referred to the start.

Internal wiring diagram

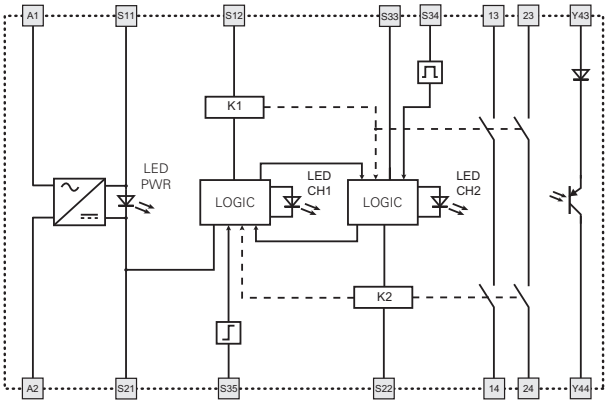

Input configuration

Input configuration with magnetic sensors

2 channels

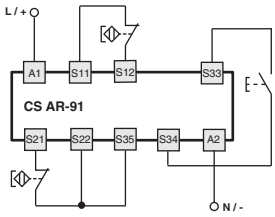

The diagram does not show the exact position of the terminals in the product

Automatic start

With regard to the indicated diagrams, bridge the start button between S33 and S34 in order to activate the automatic start module.

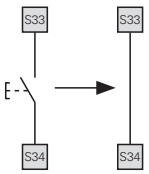

Monitored start

With regard to the indicated diagrams, remove the connection between the S22 and S35 terminals in order to activate the monitored start module.

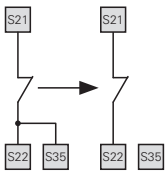

Monitoring of movable guards and magnetic safety sensors

The safety module can monitor emergency stop circuits, control circuits for movable guards as well as magnetic safety sensors. Replace the emergency stop contacts with switch contacts or sensor contacts.
The sensors can only be used in 2-channel configuration.

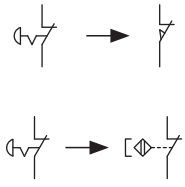

Application examples See page 85

Safety module **CS AR-51**

Module for emergency stops, end position monitoring for movable guards, safety mats and safety bumpers with 4-wire technology

Main features

- For safety applications up to SIL 3/PL e
- Inputs: 2 channels, which can be connected to electromechanical contacts, safety mats or safety bumpers with 4-wire technology
- Connection of input channels of opposite potentials
- Outputs: relay, 2NO safety
- Input with configurable start: automatic, manual or monitored
- Supply voltage: 24 Vac/dc
- Insensitive to voltage dips

Quality marks:

EC type examination certificate: IMQ CP 432 DM
UL approval: E131787
CCC approval: 2024010305656748
EAC approval: RU Д-IT.PA07.B.37848/24

Compliance with the requirements of:
Machinery Directive 2006/42/EC,
EMC Directive 2014/30/EU,
RoHS Directive 2011/65/EU.

In compliance with standards:
EN 60204-1, EN ISO 13855, EN ISO 14118,
EN ISO 12100, EN ISO 13850, EN 60529, EN 61000-6-2,
EN 61000-6-3, EN 61326-1, EN 60664-1, EN 60947-1,
EN IEC 63000, EN ISO 13849-1, EN ISO 13849-2,
EN 62061, UL 508, CSA C22.2 No. 14, GB/T14048.5

Technical data

Housing

Polyamide housing PA 66, self-extinguishing V0 acc. to UL 94	
Protection degree acc. to EN 60529:	IP40 (housing), IP20 (terminal strip)
Dimensions:	see page 135, design A

General data

Safety Integrity Level (SIL) up to:	Maximum SIL 3 acc. to EN 62061
Performance Level (PL) up to:	PL e acc. to EN ISO 13849-1
Safety category up to:	cat. 4 acc. to EN ISO 13849-1
Safety parameters:	See page 151
Ambient temperature:	-25°C…+55°C
Mechanical endurance:	>10 million operating cycles
Electrical endurance:	>100,000 operating cycles
Pollution degree:	external 3, internal 2
Rated impulse withstand voltage (U_{imp}):	4 kV
Rated insulation voltage (U_i):	250 V
Overvoltage category:	II

Power supply

Rated supply voltage (U_n):	24 Vac/dc; 50…60 Hz
Max. DC residual ripple in DC:	10%
Supply voltage tolerance:	±15% of U_n
Power consumption AC:	< 5 VA
Power consumption DC:	< 2.5 W

Control circuit

Protection against short circuits:	PTC resistance, Ih=0.5 A
PTC times:	response > 100 ms, reset > 3 s
Maximum resistance per input:	≤ 200 Ω
Current per input:	< 10 mA
Min. duration of start impulse t_{MIN}:	> 150 ms
Response time t_A:	< 120 ms
Release time t_{R1}:	< 15 ms
Release time in absence of power supply t_R:	< 120 ms
Simultaneity time t_C:	unlimited

Output circuit

Output contacts:	2 NO safety contacts
Contact type:	forcibly guided
Material of the contacts:	silver alloy
Maximum switching voltage:	230/240 Vac; 300 Vdc
Utilization categories for output contacts:	AC-15 (50 ... 60 Hz), 230 V / 3 A DC-13 (6 oper. cycles/min.), 24 V / 4 A
Maximum conventional free air thermal current per branch I_{th}:	6 A
Max. total current ΣI_{th}^2:	36 A^2
Minimum current:	10 mA
Contact resistance:	≤ 100 mΩ
External protection fuse:	4 A

The number and the load capacity of output contacts can be increased by using expansion modules or contactors. See pages 75-84.

Code structure

CS AR-51V024

Connection type	
V	Screw terminals
M	Connector with screw terminals
X	Connector with spring terminals

Supply voltage	
024	24 Vac/dc

Features approved by UL

Rated supply voltage (U_n):	24 Vac/dc; 50…60 Hz
Power consumption AC:	< 5 VA
Power consumption DC:	< 4 W

Electrical ratings:
- NO contacts: 230/240 Vac, 6 A general use, C300 pilot duty
- NC contacts: 230/240 Vac, 6 A resistive, B300 pilot duty

Notes:
- Use 60 or 75°C copper (Cu) conductor and wire size No. 30-12 AWG, stranded or solid.
- The terminal tightening torque of 5-7 lb in.
- Only for 24 Vac/dc versions: supply from remote Class 2 source or limited voltage limited energy.

- Utiliser des conducteurs en cuivre (Cu) 60 ou 75°C rigides ou flexibles de section 30-12 AWG.
- Couple de serrage des bornes de 5-7 Lb In.
- Seulement pour les versions 24 Vac/dc, alimenter avec sources de classes 2 ou avec tension limitée et énergie limitée.

Safety module CS AR-51

Pin assignment

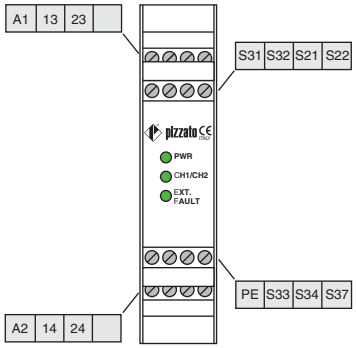

PE terminal connection
The PE terminal has to be connected to the equipotential circuit of machine protection if it is necessary.
This connection is made for functional reason, to reduce effects of an insulation fault on the machine operation.
In particular, ground faults in control circuits must not cause unwanted start-up or dangerous movements or prevent the machine from stopping.

Function of "EXT. FAULT" LED
When a pressure is exerted on the surface of a safety bumper or safety mat, a short-circuit occurs between the two conductive elements, which constitute the apparatus and can be connected to the input channels of the safety module.
The signal thereby generated causes the EXT.FAULT LED to illuminate and signal the short-circuit and the opening of the output contacts, resulting in the blocking of the control circuit and causing the machine to switch to the safety setting. The EXT. FAULT LED does not switch on if the wires or internal connections of the safety mat or safety bumper are interrupted.

Function diagrams

Configuration with automatic start

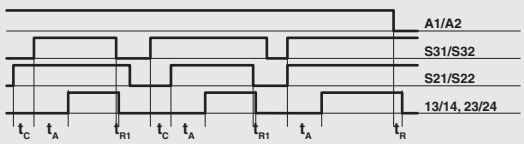

Configuration with monitored start

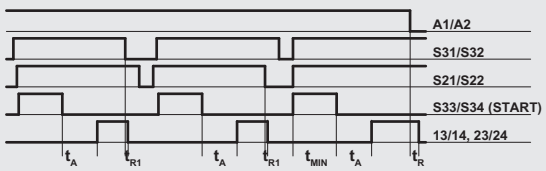

Configuration with manual start

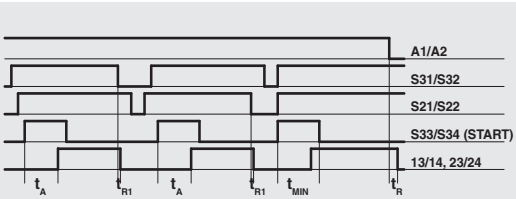

Legend:
t_{MIN}: Min. duration of start impulse
t_C: Simultaneity time
t_A: Response time
t_{R1}: Release time
t_R: Release time in absence of power supply

Internal wiring diagram

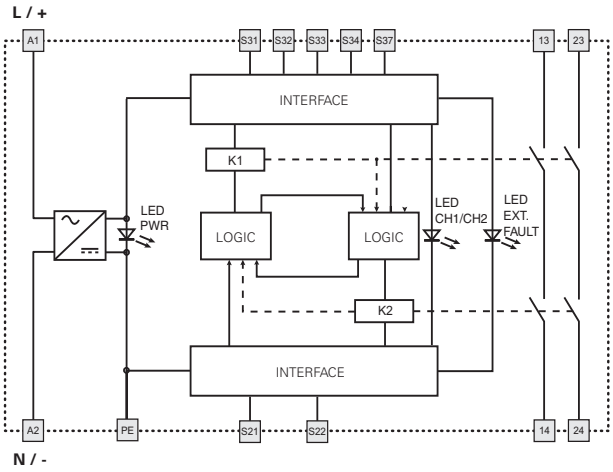

Input configuration

Safety mats and safety bumpers
Input configuration with manual start
2 channels

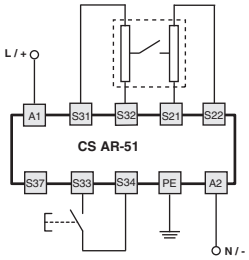

Emergency stop circuits
Input configuration with manual start
2 channels

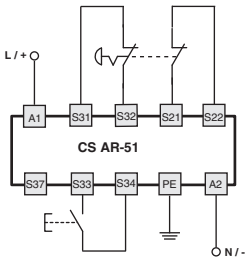

Automatic start

With regard to the indicated diagrams, bridge the start button between S33 and S34 in order to activate the automatic start module.

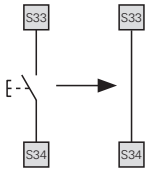

Monitored start

With regard to the indicated diagrams, establish the connection between S34 and S37 in order to activate the monitored start module.

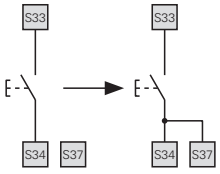

Movable guard monitoring

The safety module can monitor emergency stop circuits and control circuits for movable guards. Replace the emergency stop contacts with the switch contacts.

The diagram does not show the exact position of the terminals in the product

Safety module **CS AT-0**

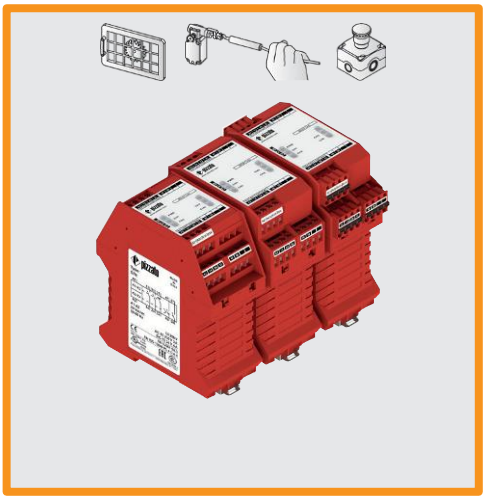

Module for emergency stops, end position monitoring for movable guards with delayed contacts at the opening of the input channels, OSSD semiconductor outputs and magnetic safety sensors

Main features

- For safety applications up to SIL 3/PL e
- Inputs: 1 or 2 channels, which can be connected to electromechanical contacts, magnetic safety sensors or OSSD solid-state outputs
- Connection of input channels of opposite potentials
- Outputs: relay, 2NO instantaneous safety, 1NC instantaneous signalling, 2NO delayed safety
- Input with configurable start: automatic, manual or monitored
- Supply voltage: 24 Vac/dc, 120 Vac, 230 Vac

Quality marks:

EC type examination certificate: IMQ CP 432 DM
UL approval: E131787
CCC approval: 2024010305656748
EAC approval: RU Д-IT.PA07.B.37848/24

Compliance with the requirements of:
Machinery Directive 2006/42/EC, EMC Directive 2014/30/EU, RoHS Directive 2011/65/EU.

In compliance with standards:
EN 60204-1, EN ISO 13855, EN ISO 14118, EN ISO 12100, EN ISO 13850, EN 60529, EN 61000-6-2, EN 61000-6-3, EN 61326-1, EN 60664-1, EN 60947-1, EN IEC 63000, EN ISO 13849-1, EN ISO 13849-2, EN 62061, UL 508, CSA C22.2 No. 14, GB/T14048.5

Technical data

Housing

Polyamide housing PA 66, self-extinguishing V0 acc. to UL 94	
Protection degree acc. to EN 60529:	IP40 (housing), IP20 (terminal strip)
Dimensions:	see page 135, design C

General data

Safety Integrity Level (SIL) up to:	Maximum SIL 3 acc. to EN 62061
Performance Level (PL) up to:	PL e acc. to EN ISO 13849-1
Safety category up to:	category 4 (instantaneous contacts), category 3 (delayed contacts) acc. to EN ISO 13849-1
Safety parameters:	See page 151
Ambient temperature:	-25°C…+55°C
Mechanical endurance:	>10 million operating cycles
Electrical endurance:	>100,000 operating cycles
Pollution degree:	external 3, internal 2
Rated impulse withstand voltage (U_{imp}):	4 kV
Rated insulation voltage (U_i):	250 V
Overvoltage category:	II

Power supply

Rated supply voltage (U_n):	24 Vac/dc; 50…60 Hz 120 Vac; 50…60 Hz 230 Vac; 50…60 Hz
Max. DC residual ripple in DC:	10%
Supply voltage tolerance:	-10% … +15% of U_n for 24 Vac/dc ±15% of U_n for 120 Vac, 230 Vac
Power consumption AC:	< 10 VA
Power consumption DC:	< 5 W

Control circuit

Protection against short circuits:	PTC resistance, Ih=0.5 A
PTC times:	response > 100 ms, reset > 3 s
Maximum resistance per input:	≤ 50 Ω
Current per input:	< 40 mA
Min. duration of start impulse t_{MIN}:	> 100 ms
Response time t_A:	< 300 ms
Release time t_{R1}:	< 25 ms
Release time in absence of power supply t_R:	< 150 ms
Release time, delayed contacts t_{R2}:	see "Code structure"
Simultaneity time t_C:	unlimited

Output circuit

Output contacts:	2 instantaneous NO safety contacts, 1 instantaneous NC auxiliary contact, 2 delayed NO safety contacts.
Contact type:	forcibly guided
Material of instantaneous contacts:	silver alloy
Material of delayed contacts:	silver alloy
Maximum switching voltage:	230/240 Vac; 300 Vdc
Utilization categories for output contacts:	AC-15 (50 ... 60 Hz), 230 V / 3 A DC-13 (6 oper. cycles/min.), 24 V / 4 A
Maximum conventional free air thermal current per branch I_{th}:	6 A
Max. total current Σ I_{th}^2:	72 (instant. contacts), 36 (del. contacts) A^2
Minimum current:	10 mA
Contact resistance:	≤ 100 mΩ
External protection fuse:	4 A

The number and the load capacity of output contacts can be increased by using expansion modules or contactors. See pages 75-84.

Code structure

article: **CS AT-00V024-** options: **TF1**

Release time, delayed contacts (t_{R2})	
0	Fixed time (see TF)
1	0.3 … 3 s, 0.3 s steps
2	1 … 10 s, 1 s steps
3	3 … 30 s, 3 s steps
4	30 … 300 s, 30 s steps

Connection type	
V	Screw terminals
M	Connector with screw terminals
X	Connector with spring terminals

Supply voltage	
024	24 Vac/dc
120	120 Vac
230	230 Vac

Release time, delayed contacts (t_{R2})	
TF0.5	0.5 s fixed time
TF1	1 s fixed time
TF3	3 s fixed time
...	...

Features approved by UL

Rated supply voltage (U_n):	24 Vac/dc; 50…60 Hz 120 Vac; 50…60 Hz 230 Vac; 50…60 Hz
Power consumption AC:	< 10 VA
Power consumption DC:	< 4 W

Electrical ratings:
- NO contacts: 230/240 Vac, 6 A general use, C300 pilot duty
- NC contacts: 230/240 Vac, 6 A resistive, B300 pilot duty

Notes:
- Use 60 or 75°C copper (Cu) conductor and wire size No. 30-12 AWG, stranded or solid.
- The terminal tightening torque of 5-7 lb in.
- Only for 24 Vac/dc versions: supply from remote Class 2 source or limited voltage limited energy.
- Surrounding air of 55°C.

- Utiliser des conducteurs en cuivre (Cu) 60 ou 75°C rigides ou flexibles de section 30-12 AWG.
- Couple de serrage des bornes de 5-7 Lb In.
- Seulement pour les versions 24 Vac/dc, alimenter avec sources de classes 2 ou avec tension limitée et énergie limitée.
- Air ambiant de 55°C.

Safety module CS AT-0

Pin assignment

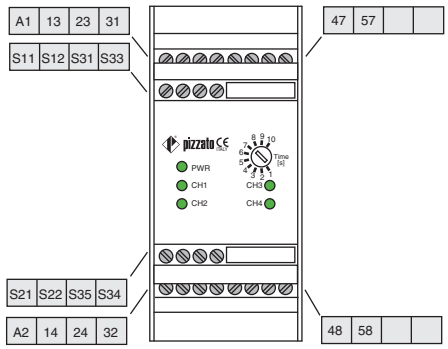

Function diagrams

Configuration with automatic start

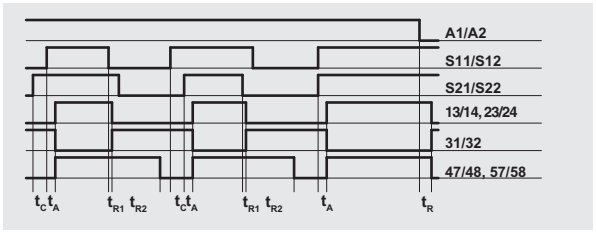

Configuration with monitored start

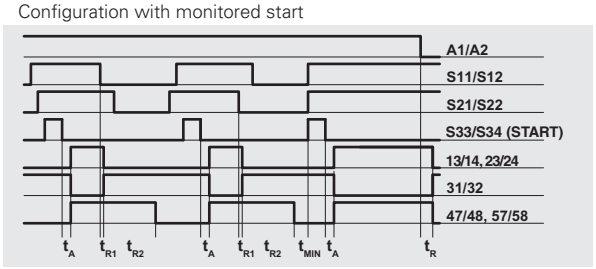

Configuration with manual start

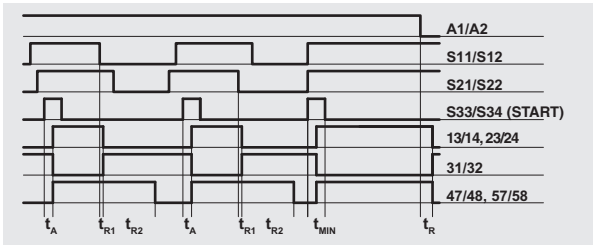

Legend:

- t_{MIN}: Min. duration of start impulse
- t_c: Simultaneity time
- t_A: Response time
- t_{R1}: Release time
- t_R: Release time in absence of power supply
- t_{R2}: Release time, delayed contacts adjustable (see "Code structure")

Notes:

The configurations with one channel are obtained taking into consideration the S11/S12 input only. In this case it is necessary to consider time t_{R1} and t_{R2} referred to input S11/S12, time t_R referred to the supply, time t_A referred to input S11/S12 and to the start, and time t_{MIN} referred to the start.

Internal wiring diagram

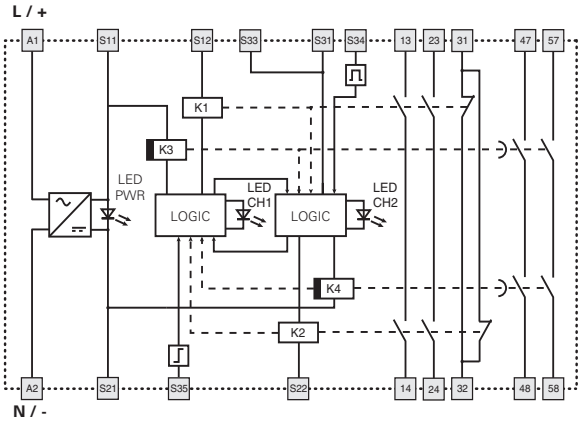

Input configuration

OSSD semiconductor outputs (e.g. ST, NS, NG series or light barriers)

Input configuration with manual start

1 channel

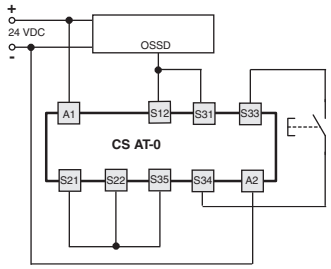

2 channels

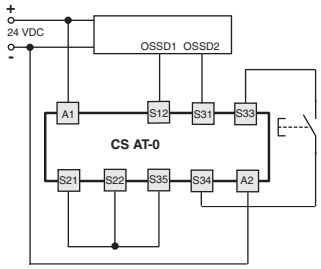

Emergency stop circuits

Input configuration with manual start

1 channel

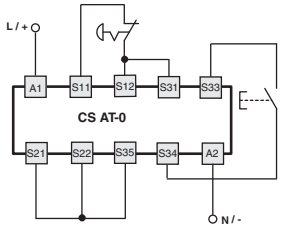

2 channels

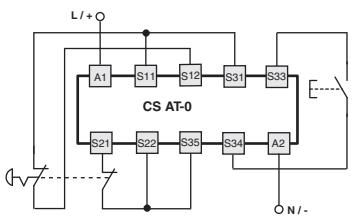

Automatic start

With regard to the indicated diagrams, bridge the start button between S33 and S34 in order to activate the automatic start module.

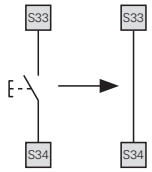

Monitored start

With regard to the indicated diagrams, remove the connection between the S22 and S35 terminals in order to activate the monitored start module.

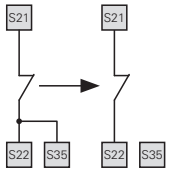

Monitoring of movable guards and magnetic safety sensors

The safety module can monitor emergency stop circuits, control circuits for movable guards as well as magnetic safety sensors. Replace the emergency stop contacts with switch contacts or sensor contacts.

The sensors can only be used in 2-channel configuration.

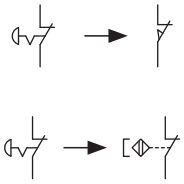

The diagram does not show the exact position of the terminals in the product

Application examples See page 85

Safety module **CS AT-1**

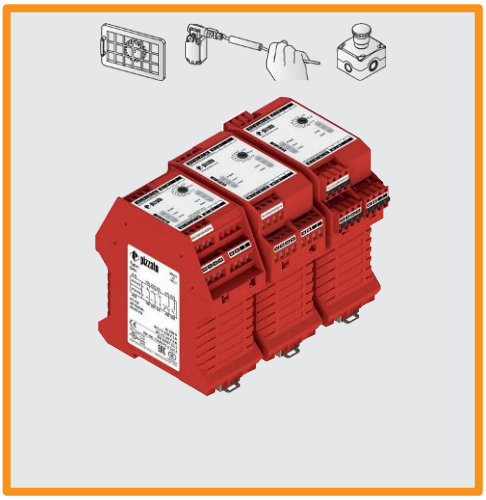

Module for emergency stops, end position monitoring for movable guards with delayed contacts at the opening of the input channels, OSSD semiconductor outputs and magnetic safety sensors

Main features

- For safety applications up to SIL 3/PL e
- Inputs: 1 or 2 channels, which can be connected to electromechanical contacts, magnetic safety sensors or OSSD solid-state outputs
- Connection of input channels of opposite potentials
- Outputs: relay, 3NO instantaneous safety, 2NO delayed safety
- Input with configurable start: automatic, manual or monitored
- Supply voltage: 24 Vac/dc, 120 Vac, 230 Vac

Quality marks:

EC type examination certificate: IMQ CP 432 DM
UL approval: E131787
CCC approval: 2024010305656748
EAC approval: RU Д-IT.PA07.B.37848/24

Compliance with the requirements of:
Machinery Directive 2006/42/EC, EMC Directive 2014/30/EU, RoHS Directive 2011/65/EU.

In compliance with standards:
EN 60204-1, EN ISO 13855, EN ISO 14118, EN ISO 12100, EN ISO 13850, EN 60529, EN 61000-6-2, EN 61000-6-3, EN 61326-1, EN 60664-1, EN 60947-1, EN IEC 63000, EN ISO 13849-1, EN ISO 13849-2, EN 62061, UL 508, CSA C22.2 No. 14, GB/T14048.5

Technical data

Housing

Polyamide housing PA 66, self-extinguishing V0 acc. to UL 94	
Protection degree acc. to EN 60529:	IP40 (housing), IP20 (terminal strip)
Dimensions:	see page 135, design C

General data

Safety Integrity Level (SIL) up to:	Maximum SIL 3 acc. to EN 62061
Performance Level (PL) up to:	PL e acc. to EN ISO 13849-1
Safety category up to:	category 4 (instantaneous contacts), category 3 (delayed contacts) acc. to EN ISO 13849-1
Safety parameters:	See page 151
Ambient temperature:	-25°C…+55°C
Mechanical endurance:	>10 million operating cycles
Electrical endurance:	>100,000 operating cycles
Pollution degree:	external 3, internal 2
Rated impulse withstand voltage (U_{imp}):	4 kV
Rated insulation voltage (U_i):	250 V
Overvoltage category:	II

Power supply

Rated supply voltage (U_n):	24 Vac/dc; 50…60 Hz 120 Vac; 50…60 Hz 230 Vac; 50…60 Hz
Max. DC residual ripple in DC:	10%
Supply voltage tolerance:	-10% … +15% of U_n for 24 Vac/dc ±15% of U_n for 120 Vac, 230 Vac
Power consumption AC:	< 10 VA
Power consumption DC:	< 5 W

Control circuit

Protection against short circuits:	PTC resistance, Ih=0.5 A
PTC times:	response > 100 ms, reset > 3 s
Maximum resistance per input:	≤ 50 Ω
Current per input:	< 40 mA
Min. duration of start impulse t_{MIN}:	> 100 ms
Response time t_A:	< 300 ms
Release time t_{R1}:	< 25 ms
Release time in absence of power supply t_R:	< 150 ms
Release time, delayed contacts t_{R2}:	see "Code structure"
Simultaneity time t_C:	unlimited

Output circuit

Output contacts:	3 instantaneous NO safety contacts, 2 delayed NO safety contacts.
Contact type:	forcibly guided
Material of instantaneous contacts:	silver alloy
Material of delayed contacts:	silver alloy
Maximum switching voltage:	230/240 Vac; 300 Vdc
Utilization categories for output contacts:	AC-15 (50 ... 60 Hz), 230 V / 3 A DC-13 (6 oper. cycles/min.), 24 V / 4 A
Maximum conventional free air thermal current per branch I_{th}:	6 A
Max. total current ΣI_{th}^2:	72 (instant. contacts), 36 (del. contacts) A^2
Minimum current:	10 mA
Contact resistance:	≤ 100 mΩ
External protection fuse:	4 A

The number and the load capacity of output contacts can be increased by using expansion modules or contactors. See pages 75-84.

Code structure

article | options

CS AT-10V024-TF1

Release time, delayed contacts (t_{R2})	
0	Fixed time (see TF)
1	0.3 … 3 s, 0.3 s steps
2	1 … 10 s, 1 s steps
3	3 … 30 s, 3 s steps
4	30 … 300 s, 30 s steps

Release time, delayed contacts (t_{R2})	
TF0.5	0.5 s fixed time
TF1	1 s fixed time
TF3	3 s fixed time
...	...

Connection type	
V	Screw terminals
M	Connector with screw terminals
X	Connector with spring terminals

Supply voltage	
024	24 Vac/dc
120	120 Vac
230	230 Vac

Features approved by UL

Rated supply voltage (U_n):	24 Vac/dc; 50…60 Hz 120 Vac; 50…60 Hz 230 Vac; 50…60 Hz
Power consumption AC:	< 10 VA
Power consumption DC:	< 4 W

Electrical ratings:
- NO contacts: 230/240 Vac, 6 A general use, C300 pilot duty
- NC contacts: 230/240 Vac, 6 A resistive, B300 pilot duty

Notes:
- Use 60 or 75°C copper (Cu) conductor and wire size No. 30-12 AWG, stranded or solid.
- The terminal tightening torque of 5-7 lb in.
- Only for 24 Vac/dc versions: supply from remote Class 2 source or limited voltage limited energy.
- Surrounding air of 55°C.

- Utiliser des conducteurs en cuivre (Cu) 60 ou 75°C rigides ou flexibles de section 30-12 AWG.
- Couple de serrage des bornes de 5-7 Lb In.
- Seulement pour les versions 24 Vac/dc, alimenter avec sources de classes 2 ou avec tension limitée et énergie limitée.
- Air ambiant de 55°C.

Safety module CS AT-1

Pin assignment

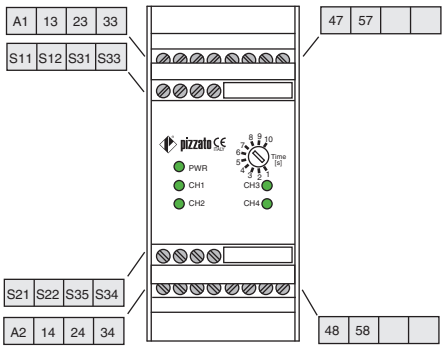

Function diagrams

Configuration with automatic start

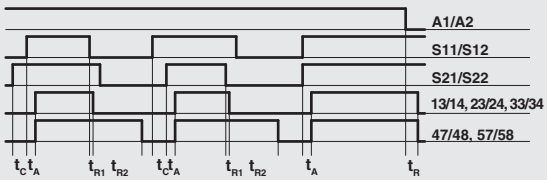

Configuration with monitored start

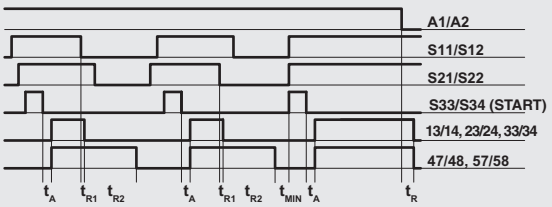

Configuration with manual start

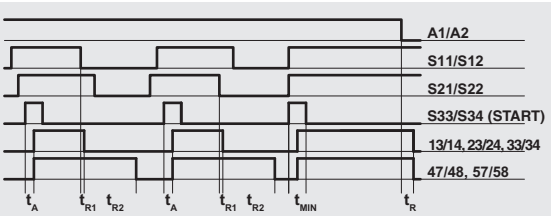

Internal wiring diagram

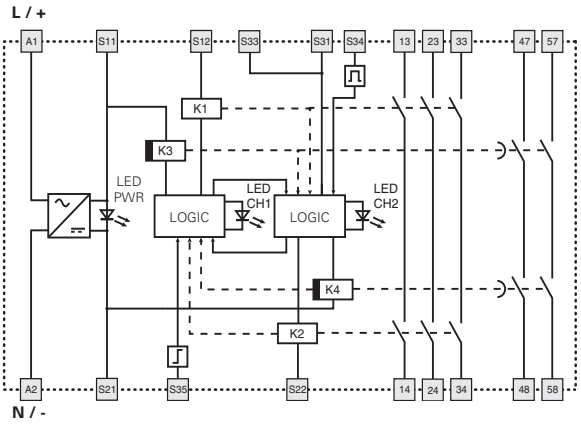

Legend:

- t_{MIN}: Min. duration of start impulse
- t_C: Simultaneity time
- t_A: Response time
- t_{R1}: Release time
- t_R: Release time in absence of power supply
- t_{R2}: Release time, delayed contacts adjustable (see "Code structure")

Notes:

The configurations with one channel are obtained taking into consideration the S11/S12 input only. In this case it is necessary to consider time t_{R1} and t_{R2} referred to input S11/S12, time t_R referred to the supply, time t_A referred to input S11/S12 and to the start, and time t_{MIN} referred to the start.

Input configuration

OSSD semiconductor outputs (e.g. ST, NS, NG series or light barriers)

Input configuration with manual start

1 channel

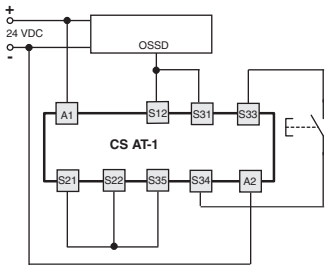

2 channels

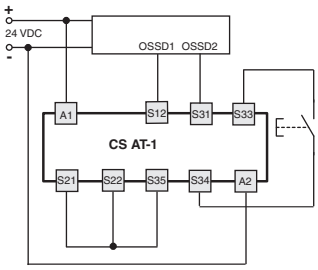

Emergency stop circuits

Input configuration with manual start

1 channel

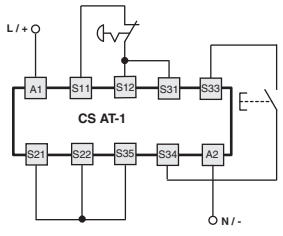

2 channels

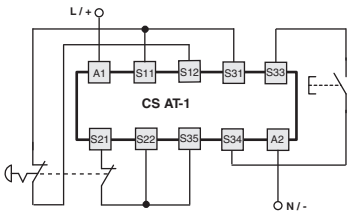

Automatic start

With regard to the indicated diagrams, bridge the start button between S33 and S34 in order to activate the automatic start module.

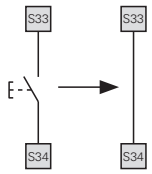

Monitored start

With regard to the indicated diagrams, remove the connection between the S22 and S35 terminals in order to activate the monitored start module.

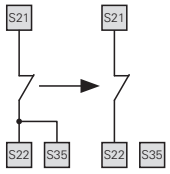

Monitoring of movable guards and magnetic safety sensors

The safety module can monitor emergency stop circuits, control circuits for movable guards as well as magnetic safety sensors. Replace the emergency stop contacts with switch contacts or sensor contacts.

The sensors can only be used in 2-channel configuration.

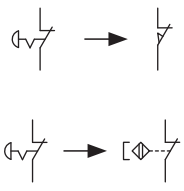

Application examples See page 85

The diagram does not show the exact position of the terminals in the product

Safety module **CS AT-3**

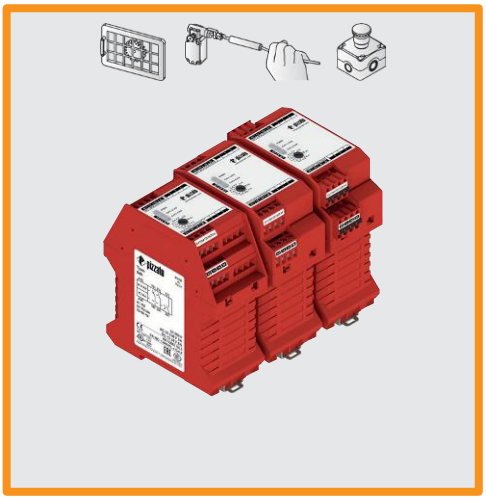

Module for emergency stop and end position monitoring for movable guards with delayed contacts at the opening of the input channels and magnetic safety sensors

Main features

- For safety applications up to SIL 3/PL e
- Inputs: 1 or 2 channels, which can be connected to electromechanical contacts or magnetic safety sensors
- Outputs: relay, 2NO instantaneous safety, 1NO delayed safety
- Input with configurable start: automatic, manual or monitored
- Supply voltage: 24 Vac/dc

Quality marks:

EC type examination certificate: IMQ CP 432 DM

UL approval:	E131787
CCC approval:	2024010305656748
EAC approval:	RU Д-IT.PA07.B.37848/24

Compliance with the requirements of:
Machinery Directive 2006/42/EC, EMC Directive 2014/30/EU, RoHS Directive 2011/65/EU.

In compliance with standards:
EN 60204-1, EN ISO 13855, EN ISO 14118, EN ISO 12100, EN ISO 13850, EN 60529, EN 61000-6-2, EN 61000-6-3, EN 61326-1, EN 60664-1, EN 60947-1, EN IEC 63000, EN ISO 13849-1, EN ISO 13849-2, EN 62061, UL 508, CSA C22.2 No. 14, GB/T14048.5

Technical data

Housing

Polyamide housing PA 66, self-extinguishing V0 acc. to UL 94	
Protection degree acc. to EN 60529:	IP40 (housing), IP20 (terminal strip)
Dimensions:	see page 135, design C

General data

Safety Integrity Level (SIL) up to:	Maximum SIL 3 acc. to EN 62061
Performance Level (PL) up to:	PL e acc. to EN ISO 13849-1
Safety category up to:	category 4 (instantaneous contacts) category 3 (delayed contacts) acc. to EN ISO 13849-1
Safety parameters:	See page 151
Ambient temperature:	-25°C…+55°C
Mechanical endurance:	>10 million operating cycles
Electrical endurance:	>100,000 operating cycles
Pollution degree:	external 3, internal 2
Rated impulse withstand voltage (U_{imp}):	4 kV
Rated insulation voltage (U_i):	250 V
Overvoltage category:	II

Power supply

Rated supply voltage (U_n):	24 Vac/dc; 50…60 Hz
Max. DC residual ripple in DC:	10%
Supply voltage tolerance:	±15% of U_n
Power consumption AC:	< 10 VA
Power consumption DC:	< 5 W

Control circuit

Protection against short circuits:	PTC resistance, Ih=0.5 A
PTC times:	response > 100 ms, reset > 3 s
Maximum resistance per input:	≤ 50 Ω
Current per input:	< 30 mA
Min. duration of start impulse t_{MIN}:	> 100 ms
Response time t_A:	< 120 ms
Release time t_{R1}:	< 20 ms
Release time in absence of power supply t_R:	< 200 ms
Release time, delayed contacts t_{R2}:	see "Code structure"
Simultaneity time t_C:	unlimited

Output circuit

Output contacts:	2 instantaneous NO safety contacts, 1 delayed NO safety contact.
Contact type:	forcibly guided
Material of the contacts:	silver alloy
Maximum switching voltage:	230/240 Vac; 300 Vdc
Utilization categories for output contacts:	AC-15 (50 ... 60 Hz), 230 V / 3 A DC-13 (6 oper. cycles/min.), 24 V / 4 A
Maximum conventional free air thermal current per branch I_{th}:	6 A
Max. total current Σ I_{th}^2:	36 A²
Minimum current:	10 mA
Contact resistance:	≤ 100 mΩ
External protection fuse:	4 A

The number and the load capacity of output contacts can be increased by using expansion modules or contactors. See pages 75-84.

Code structure

article | options

CS AT-30V024-TF1

Release time, delayed contacts (t_{R2})	
0	Fixed time (see TF)
1	0.3 … 3 s, 0.3 s steps
2	1 … 10 s, 1 s steps
3	3 … 30 s, 3 s steps
4	30 … 300 s, 30 s steps

Connection type	
V	Screw terminals
M	Connector with screw terminals
X	Connector with spring terminals

Supply voltage	
024	24 Vac/dc

Release time, delayed contacts (t_{R2})	
TF0.5	0.5 s fixed time
TF1	1 s fixed time
TF3	3 s fixed time
...	...

Features approved by UL

Rated supply voltage (U_n):	24 Vac/dc; 50…60 Hz
Power consumption AC:	< 10 VA
Power consumption DC:	< 4 W

Electrical ratings:
- NO contacts: 230/240 Vac, 6 A general use, C300 pilot duty
- NC contacts: 230/240 Vac, 6 A resistive, B300 pilot duty

Notes:
- Use 60 or 75°C copper (Cu) conductor and wire size No. 30-12 AWG, stranded or solid.
- The terminal tightening torque of 5-7 lb in.
- Only for 24 Vac/dc versions: supply from remote Class 2 source or limited voltage limited energy.
- Surrounding air of 55°C.

- Utiliser des conducteurs en cuivre (Cu) 60 ou 75°C rigides ou flexibles de section 30-12 AWG.
- Couple de serrage des bornes de 5-7 Lb In.
- Seulement pour les versions 24 Vac/dc, alimenter avec sources de classes 2 ou avec tension limitée et énergie limitée.
- Air ambiant de 55°C.

Safety module CS AT-3

Pin assignment

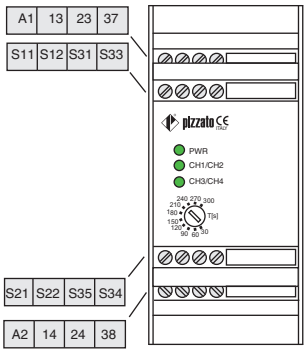

Function diagrams

Configuration with automatic start

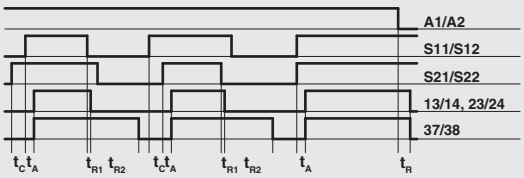

Configuration with monitored start

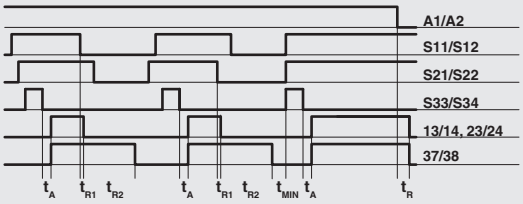

Configuration with manual start

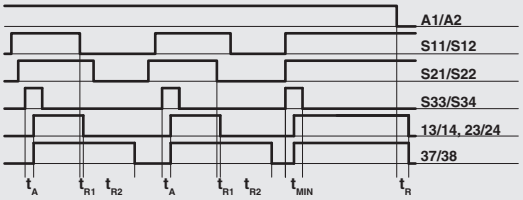

Legend:

t_{MIN}: Min. duration of start impulse
t_c: Simultaneity time
t_A: Response time
t_{R1}: Release time
t_R: Release time in absence of power supply
t_{R2}: Release time, delayed contacts adjustable (see "Code structure")

Notes:
The configurations with one channel are obtained taking into consideration the S11/S12 input only. In this case it is necessary to consider times t_{R1} and t_{R2} referred to input S11/S12, time t_R referred to the supply, time t_A referred to input S11/S12 and to the start, and time t_{MIN} referred to the start.

Internal wiring diagram

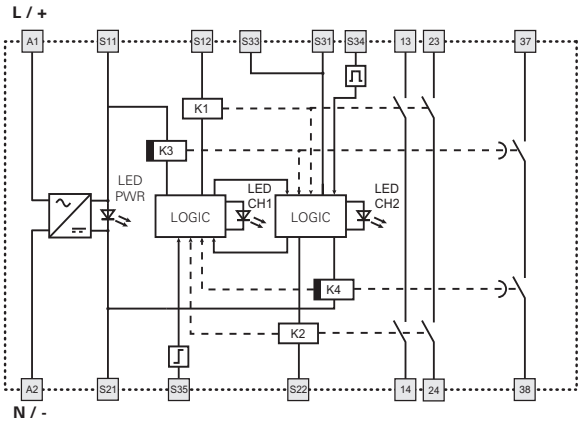

Input configuration

Emergency stop circuits	
Input configuration with manual start	
1 channel	2 channels

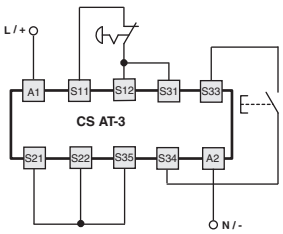

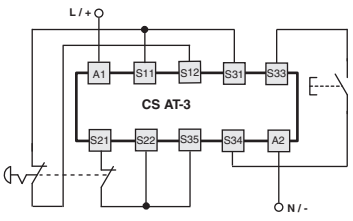

The diagram does not show the exact position of the terminals in the product

Automatic start

With regard to the indicated diagrams, bridge the start button between S33 and S34 in order to activate the automatic start module.

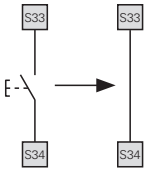

Monitored start

With regard to the indicated diagrams, remove the connection between the S22 and S35 terminals in order to activate the monitored start module.

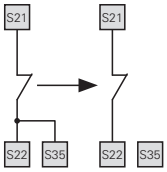

Monitoring of movable guards and magnetic safety sensors

The safety module can monitor emergency stop circuits, control circuits for movable guards as well as magnetic safety sensors. Replace the emergency stop contacts with switch contacts or sensor contacts. **The sensors can only be used in 2-channel configuration.**

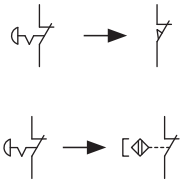

Application examples See page 85

Safety module **CS FS-1**

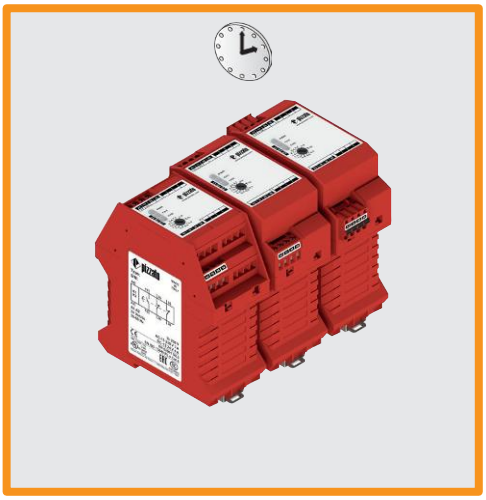

Safety timer module with delayed contacts at energizing

Main features

- For safety applications up to SIL 3/PL e
- Timing circuits by means of safety system with self-monitoring and redundancy
- Release command for interlocked safety devices
- Outputs: relay, 1NO safety, 2NC signalling
- Supply voltage: 24 Vac/dc, 120 Vac, 230 Vac

Quality marks:

EC type examination certificate: IMQ CP 432 DM
UL approval: E131787
CCC approval: 2024010305656748
EAC approval: RU Д-IT.PA07.B.37848/24

Compliance with the requirements of:
Machinery Directive 2006/42/EC, EMC Directive 2014/30/EU, RoHS Directive 2011/65/EU.

In compliance with standards:
EN 60204-1, EN ISO 14118, EN ISO 12100, EN 60529, EN 61000-6-2, EN 61000-6-3, EN 61326-1, EN 60664-1, EN 60947-1, EN IEC 63000, EN ISO 13849-1, EN ISO 13849-2, EN 62061, UL 508, CSA C22.2 No. 14, GB/T14048.5

Technical data

Housing

Polyamide housing PA 66, self-extinguishing V0 acc. to UL 94	
Protection degree acc. to EN 60529:	IP40 (housing), IP20 (terminal strip)
Dimensions:	see page 135, design C

General data

Safety Integrity Level (SIL) up to:	Maximum SIL 3 acc. to EN 62061
Performance Level (PL) up to:	PL e acc. to EN ISO 13849-1
Safety category up to:	cat. 4 acc. to EN ISO 13849-1 (depending on circuit structure)
Safety parameters:	See page 151
Ambient temperature:	-25°C…+55°C
Mechanical endurance:	>10 million operating cycles
Electrical endurance:	>100,000 operating cycles
Pollution degree:	external 3, internal 2
Rated impulse withstand voltage (U_{imp}):	4 kV
Rated insulation voltage (U_i):	250 V
Overvoltage category:	II

Power supply

Rated supply voltage (U_n):	24 Vac/dc; 50…60 Hz 120 Vac; 50…60 Hz 230 Vac; 50…60 Hz
Max. DC residual ripple in DC:	10%
Supply voltage tolerance:	±15% of U_n
Power consumption AC:	< 5 VA
Power consumption DC:	< 2 W

Control circuit

Protection against short circuits:	PTC resistance, Ih=0.5 A
PTC times:	response > 100 ms, reset > 3 s
Response time t_A:	see "Code structure"
Release time in absence of power supply t_R:	< 60 ms

Output circuit

Output contacts:	1 NO safety contact, 2 NC auxiliary contacts
Contact type:	forcibly guided
Material of the contacts:	silver alloy
Maximum switching voltage:	230/240 Vac; 300 Vdc
Utilization categories for output contacts:	AC-15 (50 ... 60 Hz), 230 V / 3 A DC-13 (6 oper. cycles/min.), 24 V / 4 A
Maximum conventional free air thermal current per branch I_{th}:	6 A
Max. total current ΣI_{th}^2:	36 A^2
Minimum current:	10 mA
Contact resistance:	≤ 100 mΩ
External protection fuse:	4 A

The number and the load capacity of output contacts can be increased by using expansion modules or contactors. See pages 75-84.

Code structure

article | options

CS FS-11V024-TF1

Response time (t_A)	
0	Fixed time (see Tfx)
1	0.3 … 3 s, 0.3 s steps
2	1 … 10 s, 1 s steps
3	3 … 30 s, 3 s steps
4	30 … 300 s, 30 s steps

Connection type	
V	Screw terminals
M	Connector with screw terminals
X	Connector with spring terminals

Supply voltage	
024	24 Vac/dc
120	120 Vac
230	230 Vac

Release time, delayed contacts (t_A)	
TF0.5	0.5 s fixed time
TF1	1 s fixed time
TF3	3 s fixed time
TF10	10 s fixed time

Features approved by UL

Rated supply voltage (U_n):	24 Vac/dc; 50…60 Hz 120 Vac; 50…60 Hz 230 Vac; 50…60 Hz
Power consumption AC:	< 5 VA
Power consumption DC:	< 2 W

Electrical ratings:
- NO contacts: 230/240 Vac, 6 A general use, C300 pilot duty
- NC contacts: 230/240 Vac, 6 A resistive, B300 pilot duty

Notes:
- Use 60 or 75°C copper (Cu) conductor and wire size No. 30-12 AWG, stranded or solid.
- The terminal tightening torque of 5-7 lb in.
- Only for 24 Vac/dc versions: supply from remote Class 2 source or limited voltage limited energy.

- Utiliser des conducteurs en cuivre (Cu) 60 ou 75°C rigides ou flexibles de section 30-12 AWG.
- Couple de serrage des bornes de 5-7 Lb In.
- Seulement pour les versions 24 Vac/dc, alimenter avec sources de classes 2 ou avec tension limitée et énergie limitée.

Safety module CS FS-1

Pin assignment

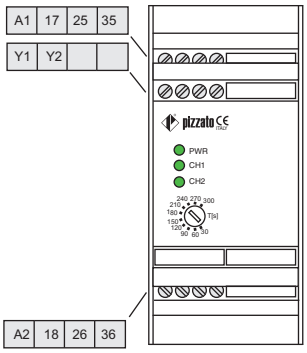

Function diagram

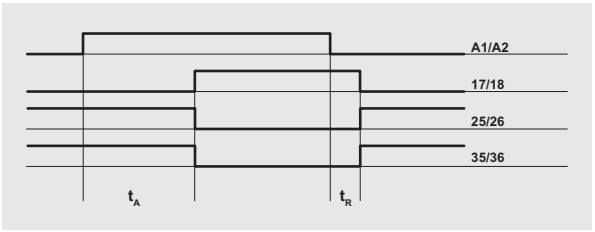

Legend:
t_A: Adjustable response time (see "Code structure")
t_R: Release time in absence of power supply

Internal wiring diagram

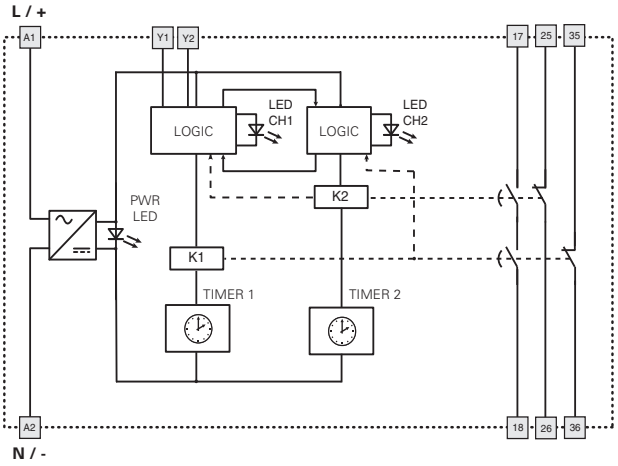

Y1-Y2: optional feedback inputs from any external contactors which are directly controlled by the module.

Circuit structure

Monitoring of a door-lock system with manual release

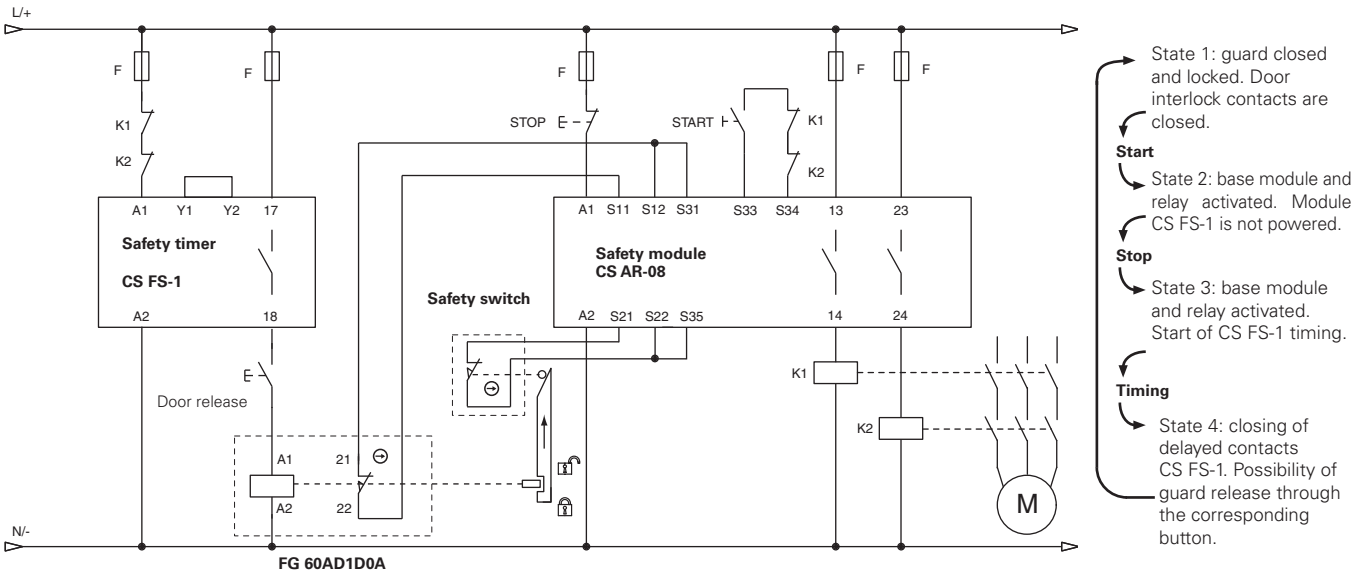

FG 60AD1D0A

The diagram illustrates the operating principle of a typical circuit for monitoring a door-lock system with interlock in the de-energised state and manual release of the individual doors.

The diagram does not show the exact position of the terminals in the product

Safety module **CS FS-2**

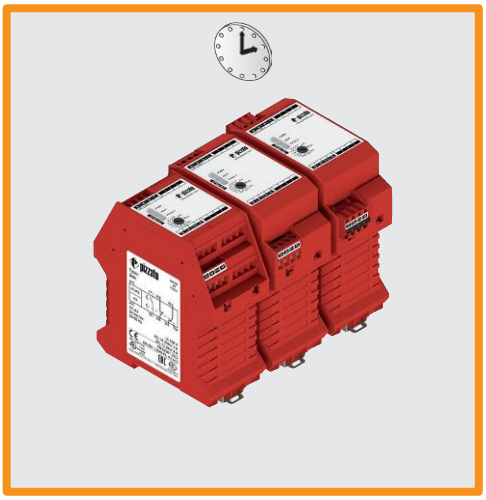

Safety timer module with delayed contacts at energizing

Main features

- For safety applications up to SIL 2/PL d
- Timing circuits by means of safety system with self-monitoring and redundancy
- Release command for interlocked safety devices
- Outputs: relay, 1NO safety, 1NC signalling, 1CO signalling
- Supply voltage: 24 Vdc, 120 Vac

Quality marks:

0123

EC type examination certificate: M6A 075157 0017

UL approval:	E131787
CCC approval:	2024010305656748
TÜV SÜD approval:	Z10 075157 0016
EAC approval:	RU Д-IT.PA07.B.37848/24
UKCA approval:	UK-MAC000074 i01

Compliance with the requirements of:
Machinery Directive 2006/42/EC, EMC Directive 2014/30/EU, RoHS Directive 2011/65/EU.

In compliance with standards:
EN 60204-1, EN ISO 14118, EN ISO 12100, EN 60529, EN 61000-6-2, EN 61000-6-3, EN 61326-1, EN 60664-1, EN 60947-1, EN IEC 63000, EN ISO 13849-1, EN ISO 13849-2, EN 62061, UL 508, CSA C22.2 No. 14, GB/T14048.5

Technical data

Housing

Polyamide housing PA 66, self-extinguishing V0 acc. to UL 94	
Protection degree acc. to EN 60529:	IP40 (housing), IP20 (terminal strip)
Dimensions:	see page 135, design C

General data

Safety Integrity Level (SIL) up to:	Maximum SIL 2 acc. to EN 62061
Performance Level (PL) up to:	PL d acc. to EN ISO 13849-1
Safety category up to:	cat. 3 acc. to EN ISO 13849-1
Safety parameters:	See page 151
Ambient temperature:	-25°C…+55°C
Mechanical endurance:	>10 million operating cycles
Electrical endurance:	>100,000 operating cycles
Pollution degree:	external 3, internal 2
Rated impulse withstand voltage (U_{imp}):	4 kV
Rated insulation voltage (U_i):	250 V
Overvoltage category:	II

Power supply

Rated supply voltage (U_n):	24 Vdc (A1-A2) 120 Vac; 50…60 Hz (B1-B2)
Max. DC residual ripple in DC:	10%
Supply voltage tolerance:	±15% of U_n
Power consumption AC:	< 5 VA
Power consumption DC:	< 3 W

Control circuit

Protection against short circuits:	PTC resistance, Ih=0.5 A
PTC times:	response > 100 ms, reset > 3 s
Response time t_A:	see "Code structure"
Release time in absence of power supply t_R:	< 100 ms

Output circuit

Output contacts:	1 NO safety contact, 1 NC auxiliary contact, 1 CO auxiliary contact,
Contact type:	forcibly guided
Material of the contacts:	silver alloy
Maximum switching voltage:	230/240 Vac; 300 Vdc
Utilization categories for output contacts:	AC-15 (50 ... 60 Hz), 230 V / 3 A DC-13 (6 oper. cycles/min.), 24 V / 4 A
Maximum conventional free air thermal current per branch I_{th}:	6 A
Max. total current ΣI_{th}^2:	36 A²
Minimum current:	10 mA
Contact resistance:	≤ 100 mΩ
External protection fuse:	4 A
Error signal output (Y14):	Type: PNP
Rated operating voltage (U_e):	24 Vdc
Rated operating current (Ie):	10 mA

The number and the load capacity of output contacts can be increased by using expansion modules or contactors. See pages 75-84.

Code structure

article | options

CS FS-20VU24-TFxx

Response time (t_A)	
0	Fixed time (see Tfx)
1	0.3 … 3 s, 0.3 s steps
2	1 … 10 s, 1 s steps
3	3 … 30 s, 3 s steps
4	30 … 300 s, 30 s steps

Response time (t_A)	
TFxx	xx = s (fixed time)

Connection type	
V	Screw terminals
M	Connector with screw terminals
X	Connector with spring terminals

Supply voltage	
U24	24 Vdc
120	24 Vdc (A1-A2) 120 Vac (B1-B2)

Features approved by UL

Rated supply voltage (U_n):	24 Vdc; 120 Vac; 50…60 Hz
Power consumption AC:	< 5 VA
Power consumption DC:	< 2 W

Electrical ratings:
- NO contacts: 230/240 Vac, 6 A general use, C300 pilot duty
- NC contacts: 230/240 Vac, 6 A resistive, B300 pilot duty

Notes:
- Use 60 or 75°C copper (Cu) conductor and wire size No. 30-12 AWG, stranded or solid.
- The terminal tightening torque of 5-7 lb in.
- Only for 24 Vac/dc versions: supply from remote Class 2 source or limited voltage limited energy.

- Utiliser des conducteurs en cuivre (Cu) 60 ou 75°C rigides ou flexibles de section 30-12 AWG.
- Couple de serrage des bornes de 5-7 Lb In.
- Seulement pour les versions 24 Vac/dc, alimenter avec sources de classes 2 ou avec tension limitée et énergie limitée.

Features approved by TÜV SÜD

Rated supply voltage U_n: 24 Vdc; ± 15%, 120 Vac ± 15%
Power consumption: 5 VA max AC, 2 W max DC
Rated operating current (max.): 4 A
Maximum switching load (max.): 1380 VA
Ambient temperature: -25°C … + 55°C
Storage temperature: -25°C … + 70°C
Protection degree: IP40 (housing), IP20 (terminal strip)
In compliance with standards: 2006/42/EC Machinery Directive, EN ISO 13849-1:2015 (up to Cat. 3 PL d), EN 61508-1:2010 (SIL 2), EN 61508-2:2010 (SIL 2), EN 61508-3:2010 (SIL 2), EN IEC 62061:2021.

Safety module CS FS-2

Pin assignment

CS FS-20••••-TFxx

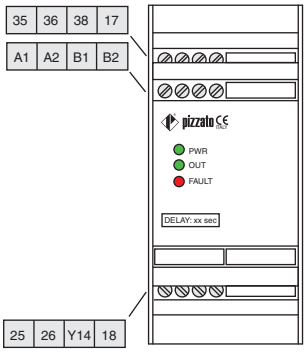

CS FS-2•••••

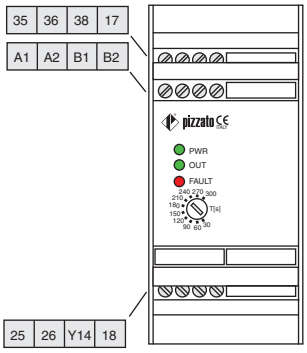

Function diagram

CS FS-2••••• Delay on
Normal operation without faults

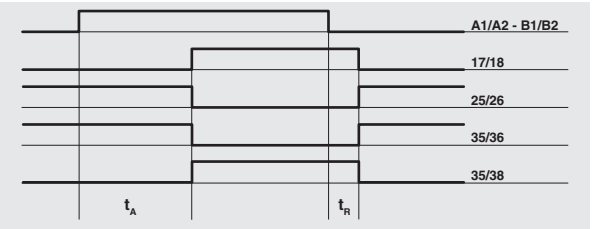

Legend:
t_A: Adjustable response time (see "Code structure")
t_R: Release time in absence of power supply

Internal wiring diagram

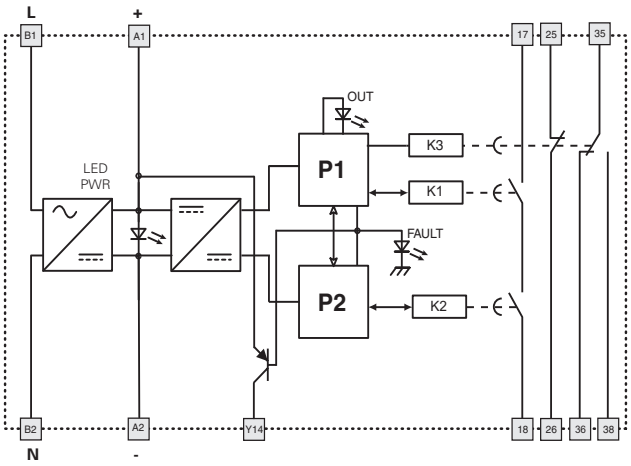

A1-A2: 24 Vdc
B1-B2: 120 Vac

Y14: auxiliary output, activated when the module enters fault state.

Safety module **CS FS-3**

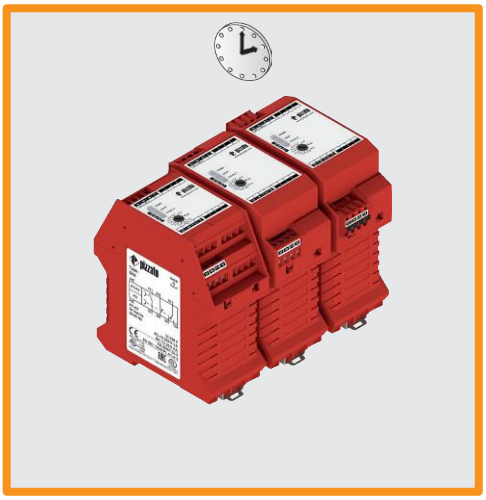

Safety timer modules with response delay

Main features

- For safety applications up to SIL 2/PL d
- Timing circuits by means of safety system with self-monitoring and redundancy
- Release command for interlocked safety devices
- Outputs: relay, 1NO safety, 1NC signalling, 1CO signalling
- Supply voltage: 24 Vdc, 120 Vac

Quality marks:

EC type examination certificate: M6A 075157 0017

UL approval:	E131787
CCC approval:	2024010305656748
TÜV SÜD approval:	Z10 075157 0016
EAC approval:	RU Д-IT.PA07.B.37848/24
UKCA approval:	UK-MAC000074 i01

Compliance with the requirements of:
Machinery Directive 2006/42/EC,
EMC Directive 2014/30/EU,
RoHS Directive 2011/65/EU.

In compliance with standards:
EN 60204-1, EN ISO 14118, EN ISO 12100, EN 60529, EN 61000-6-2, EN 61000-6-3, EN 61326-1, EN 60664-1, EN 60947-1, EN IEC 63000, EN ISO 13849-1, EN ISO 13849-2, EN 62061, UL 508, CSA C22.2 No. 14, GB/T14048.5

Technical data

Housing

Polyamide housing PA 66, self-extinguishing V0 acc. to UL 94	
Protection degree acc. to EN 60529:	IP40 (housing), IP20 (terminal strip)
Dimensions:	see page 135, design C

General data

Safety Integrity Level (SIL) up to:	Maximum SIL 2 acc. to EN 62061
Performance Level (PL) up to:	PL d acc. to EN ISO 13849-1
Safety category up to:	cat. 3 acc. to EN ISO 13849-1
Safety parameters:	See page 151
Ambient temperature:	-25°C…+55°C
Mechanical endurance:	>10 million operating cycles
Electrical endurance:	>100,000 operating cycles
Pollution degree:	external 3, internal 2
Rated impulse withstand voltage (U_{imp}):	4 kV
Rated insulation voltage (U_i):	250 V
Overvoltage category:	II

Power supply

Rated supply voltage U_n:	24 Vdc (A1-A2) 120 Vac; 50…60 Hz (B1-B2)
Max. DC residual ripple in DC:	10%
Supply voltage tolerance:	±15% of U_n
Power consumption AC:	< 5 VA
Power consumption DC:	< 3 W

Control circuit

Protection against short circuits:	PTC resistance, Ih=0.5 A
PTC times:	response > 100 ms, reset > 3 s
Release time t_A:	see "Code structure"
Release time in absence of power supply t_R:	< 100 ms
Start-up time t_S:	< 250 ms

Output circuit

Output contacts:	1 NO safety contact, 1 NC auxiliary contact, 1 CO auxiliary contact,
Contact type:	forcibly guided
Material of the contacts:	silver alloy
Maximum switching voltage:	230/240 Vac; 300 Vdc
Utilization categories for output contacts:	AC-15 (50 ... 60 Hz), 230 V / 3 A DC-13 (6 oper. cycles/min.), 24 V / 4 A
Maximum conventional free air thermal current per branch I_{th}:	6 A
Max. total current ΣI_{th}^2:	36 A^2
Minimum current:	10 mA
Contact resistance:	≤ 100 mΩ
External protection fuse:	4 A
Error signal output (Y14):	Type: PNP
Rated operating voltage (U_e):	24 Vdc
Rated operating current (I_e):	10 mA

The number and the load capacity of output contacts can be increased by using expansion modules or contactors. See pages 75-84.

Code structure

article: **CS FS-30VU24-**
options: **TFxx**

Release time (t_A)	
0	Fixed time (see Tfx)
1	0.3 … 3 s, 0.3 s steps
2	1 … 10 s, 1 s steps
3	3 … 30 s, 3 s steps
4	30 … 300 s, 30 s steps

Release time (t_A)	
TFxx	xx = s (fixed time)

Connection type	
V	Screw terminals
M	Connector with screw terminals
X	Connector with spring terminals

Supply voltage	
U24	24 Vdc
120	24 Vdc (A1-A2) 120 Vac (B1-B2)

Features approved by UL

Rated supply voltage (U_n):	24 Vdc; 120 Vac; 50…60 Hz
Power consumption AC:	< 5 VA
Power consumption DC:	< 2 W
Electrical ratings:	

- NO contacts: 230/240 Vac, 6 A general use, C300 pilot duty
- NC contacts: 230/240 Vac, 6 A resistive, B300 pilot duty

Notes:
- Use 60 or 75°C copper (Cu) conductor and wire size No. 30-12 AWG, stranded or solid.
- The terminal tightening torque of 5-7 lb in.
- Only for 24 Vac/dc versions: supply from remote Class 2 source or limited voltage limited energy.

- Utiliser des conducteurs en cuivre (Cu) 60 ou 75°C rigides ou flexibles de section 30-12 AWG.
- Couple de serrage des bornes de 5-7 Lb In.
- Seulement pour les versions 24 Vac/dc, alimenter avec sources de classes 2 ou avec tension limitée et énergie limitée.

Features approved by TÜV SÜD

Rated supply voltage U_n: 24 Vdc; ± 15%, 120 Vac ± 15%
Power consumption: 5 VA max AC, 2 W max DC
Rated operating current (max.): 4 A
Maximum switching load (max.): 1380 VA
Ambient temperature: -25°C … + 55°C
Storage temperature: -25°C … + 70°C
Protection degree: IP40 (housing), IP20 (terminal strip)
In compliance with standards: 2006/42/EC Machinery Directive, EN ISO 13849-1:2015 (up to Cat. 3 PL d), EN 61508-1:2010 (SIL 2), EN 61508-2:2010 (SIL 2), EN 61508-3:2010 (SIL 2), EN IEC 62061:2021.

Safety module CS FS-3

Pin assignment

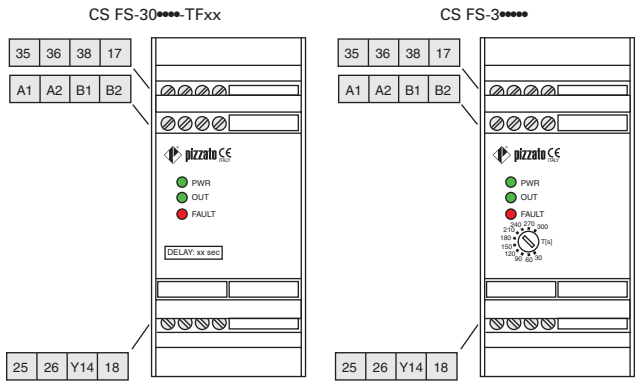

Internal wiring diagram

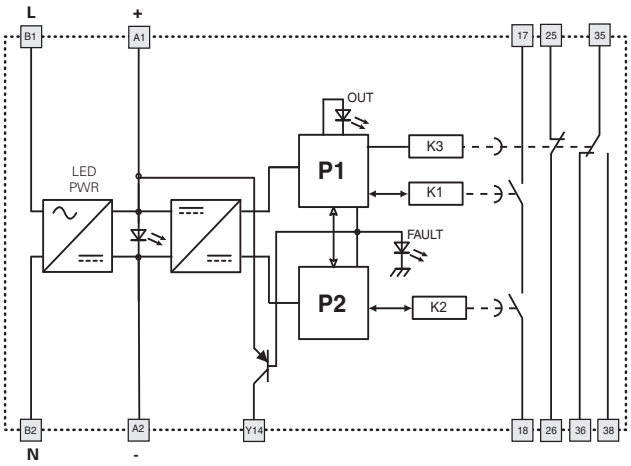

A1-A2: 24 Vdc
B1-B2: 120 Vac

Y14: auxiliary output, activated when the module enters fault state.

Function diagram

CS FS-3••••• Delay off
Normal operation without faults

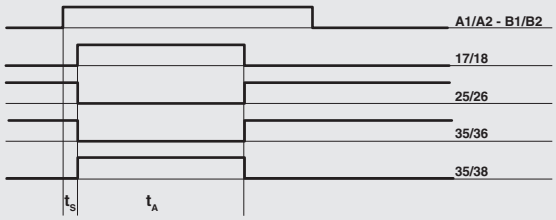

Operation without power supply

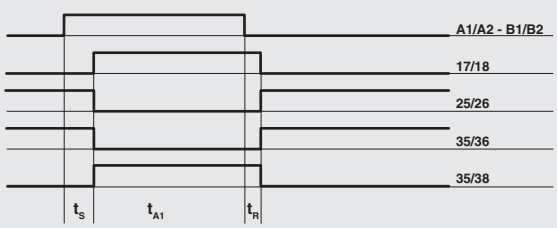

Legend:
t_A: Release time (see "Code structure")
t_{A1}: Release time if duration of power supply is less than t_A
t_R: Release time in absence of power supply
t_S: Start-up time

Safety module **CS FS-5**

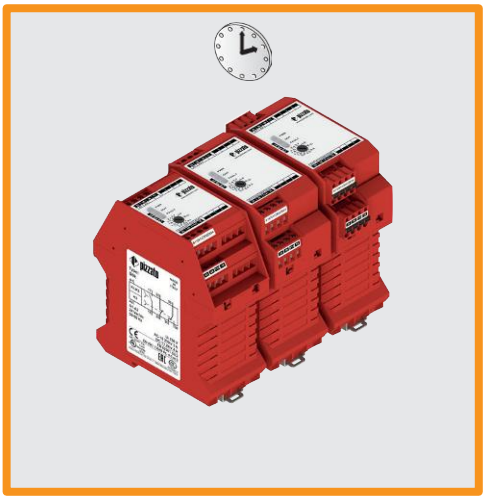

Safety timer module with delayed contacts upon opening of the inputs

Main features

- For safety applications up to SIL 2/PL d
- Timing circuits by means of safety system with self-monitoring and redundancy
- Release command for interlocked safety devices
- Outputs: relay, 1NO safety, 1NC signalling, 1CO signalling
- Supply voltage: 24 Vdc, 120 Vac

Quality marks:

EC type examination certificate: M6A 075157 0017

UL approval:	E131787
CCC approval:	2024010305656748
TÜV SÜD approval:	Z10 075157 0016
EAC approval:	RU Д-IT.PA07.B.37848/24
UKCA approval:	UK-MAC000074 i01

Compliance with the requirements of:
Machinery Directive 2006/42/EC,
EMC Directive 2014/30/EU,
RoHS Directive 2011/65/EU.

In compliance with standards:
EN 60204-1, EN ISO 14118, EN ISO 12100, EN 60529, EN 61000-6-2, EN 61000-6-3, EN 61326-1, EN 60664-1, EN 60947-1, EN IEC 63000, EN ISO 13849-1, EN ISO 13849-2, EN 62061, UL 508, CSA C22.2 No. 14, GB/T14048.5

Technical data

Housing

Polyamide housing PA 66, self-extinguishing V0 acc. to UL 94	
Protection degree acc. to EN 60529:	IP40 (housing), IP20 (terminal strip)
Dimensions:	see page 135, design C

General data

Safety Integrity Level (SIL) up to:	Maximum SIL 2 acc. to EN 62061
Performance Level (PL) up to:	PL d acc. to EN ISO 13849-1
Safety category up to:	cat. 3 acc. to EN ISO 13849-1
Safety parameters:	See page 151
Ambient temperature:	-25°C…+55°C
Mechanical endurance:	>10 million operating cycles
Electrical endurance:	>100,000 operating cycles
Pollution degree:	external 3, internal 2
Rated impulse withstand voltage (U_{imp}):	4 kV
Rated insulation voltage (U_i):	250 V
Overvoltage category:	II

Power supply

Rated supply voltage U_n:	24 Vdc (A1-A2) 120 Vac; 50…60 Hz (B1-B2)
Max. DC residual ripple in DC:	10%
Supply voltage tolerance:	±15% of U_n
Power consumption AC:	< 5 VA
Power consumption DC:	< 3 W

Control circuit

Protection against short circuits:	PTC resistance, Ih=0.5 A
PTC times:	response > 100 ms, reset > 3 s
Release time t_A:	see "Code structure"
Release time in absence of power supply t_R:	< 100 ms

Input circuit

Maximum resistance per input:	≤ 50 Ω
Current per input:	< 8 mA
Response time t_S:	< 150 ms
Min. duration input signal t_{MIN}:	> 100 ms

Output circuit

Output contacts:	1 NO safety contact, 1 NC auxiliary contact, 1 CO auxiliary contact,
Contact type:	forcibly guided
Material of the contacts:	silver alloy
Maximum switching voltage:	230/240 Vac; 300 Vdc
Utilization categories for output contacts:	AC-15 (50 ... 60 Hz), 230 V / 3 A DC-13 (6 oper. cycles/min.), 24 V / 4 A
Maximum conventional free air thermal current per branch I_{th}:	6 A
Max. total current Σ I_{th}^2:	36 A²
Minimum current:	10 mA
Contact resistance:	≤ 100 mΩ
External protection fuse:	4 A
Error signal output (Y14):	Type: PNP
Rated operating voltage (U_e):	24 Vdc
Rated operating current (I_e):	10 mA

The number and the load capacity of output contacts can be increased by using expansion modules or contactors. See pages 75-84.

Code structure

article: **CS FS-50VU24-** options: **TFxx**

Release time (t_A)	
0	Fixed time (see Tfx)
1	0.3 … 3 s, 0.3 s steps
2	1 … 10 s, 1 s steps
3	3 … 30 s, 3 s steps
4	30 … 300 s, 30 s steps

Release time (t_A)	
TFxx	xx = s (fixed time)

Connection type	
V	Screw terminals
M	Connector with screw terminals
X	Connector with spring terminals

Supply voltage	
U24	24 Vdc
120	24 Vdc (A1-A2) 120 Vac (B1-B2)

Features approved by UL

Rated supply voltage (U_n):	24 Vdc; 120 Vac; 50…60 Hz
Power consumption AC:	< 5 VA
Power consumption DC:	< 2 W

Electrical ratings:
- NO contacts: 230/240 Vac, 6 A general use, C300 pilot duty
- NC contacts: 230/240 Vac, 6 A resistive, B300 pilot duty

Notes:
- Use 60 or 75°C copper (Cu) conductor and wire size No. 30-12 AWG, stranded or solid.
- The terminal tightening torque of 5-7 lb in.
- Only for 24 Vac/dc versions: supply from remote Class 2 source or limited voltage limited energy.

- Utiliser des conducteurs en cuivre (Cu) 60 ou 75°C rigides ou flexibles de section 30-12 AWG.
- Couple de serrage des bornes de 5-7 Lb In.
- Seulement pour les versions 24 Vac/dc, alimenter avec sources de classes 2 ou avec tension limitée et énergie limitée.

Features approved by TÜV SÜD

Rated supply voltage (U_n): 24 Vdc; ± 15%, 120 Vac ± 15%
Power consumption: 5 VA max AC, 2 W max DC
Rated operating current (max.): 4 A
Maximum switching load (max.): 1380 VA
Ambient temperature: -25°C … + 55°C
Storage temperature: -25°C … + 70°C
Protection degree: IP40 (housing), IP20 (terminal strip)
In compliance with standards: 2006/42/EC Machinery Directive, EN ISO 13849-1:2015 (up to Cat. 3 PL d), EN 61508-1:2010 (SIL 2), EN 61508-2:2010 (SIL 2), EN 61508-3:2010 (SIL 2), EN IEC 62061:2021.

Safety module CS FS-5

Pin assignment

CS FS-50••••-TFxx

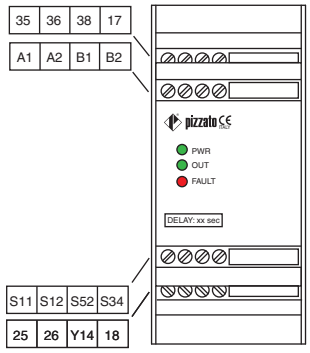

CS FS-5•••••

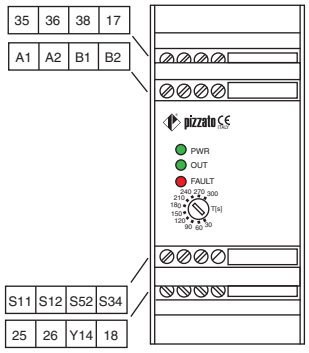

Function diagram

Configuration with automatic start

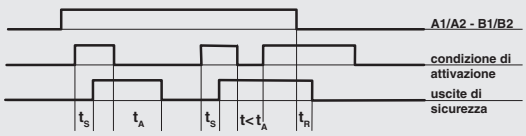

Configuration with manual start

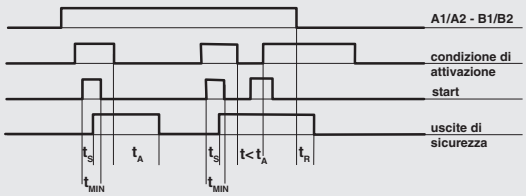

Legend:
t_A: Release time (see "Code structure")
t_R: Release time in absence of power supply
t_S: Response time
t_{MIN}: Min. duration input signal

Internal wiring diagram

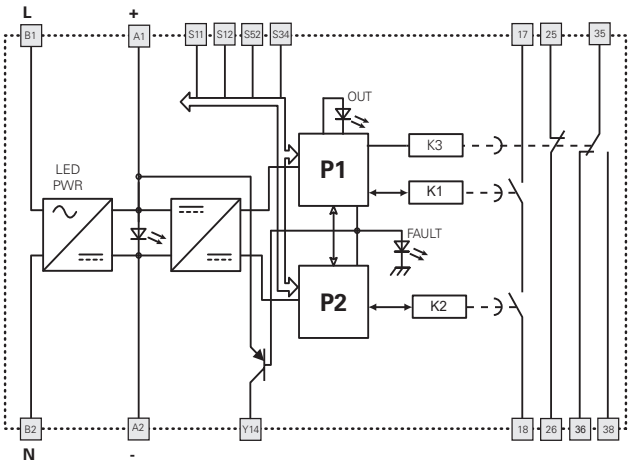

A1-A2: 24 Vdc
B1-B2: 120 Vac

Y14: auxiliary output, activated when the module enters fault state.

Input configuration

Movable guard monitoring	
Input configuration with manual start	
1 channel	2 channels

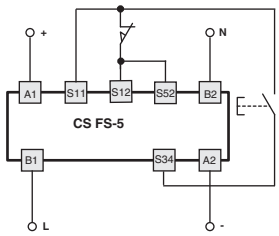

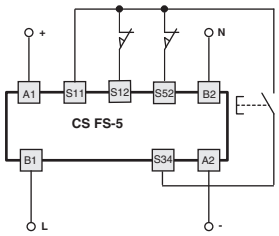

The diagram does not show the exact position of the terminals in the product

Automatic start

With regard to the indicated diagrams, bridge the start button between S33 and S34 in order to activate the automatic start module.

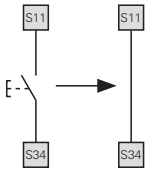

Monitoring of movable guards and magnetic safety sensors

The safety module can monitor control circuits for movable guards as well as magnetic safety sensors. To do this, the switch contacts must be replaced with sensors.
The sensors can only be used in 2-channel configuration.

Safety module **CS DM-01**

Two-hand control device according to EN ISO 13851: type III C or safety module with synchronism control

Main features

- For safety applications up to SIL 3/PL e
- Inputs: 2 channels, which can be connected to electromechanical contacts or for two-hand control
- Connection of input channels of opposite potentials
- Outputs: relay, 3NO safety, 1NC signalling
- Supply voltage: 24 Vac/dc, 120 Vac, 230 Vac

Quality marks:

EC type examination certificate: IMQ BP 210 DM
UL approval: E131787
CCC approval: 2024010305656748
EAC approval: RU Д-IT.PA07.B.37848/24

Compliance with the requirements of:
Machinery Directive 2006/42/EC,
EMC Directive 2014/30/EU,
RoHS Directive 2011/65/EU.

In compliance with standards:
EN 60204-1, EN ISO 14118, EN ISO 12100, EN ISO 13851, EN 60529, EN 61000-6-2, EN 61000-6-3, EN 61326-1, EN 60664-1, EN 60947-1, EN IEC 63000, EN ISO 13849-1, EN ISO 13849-2, EN 62061, UL 508, CSA C22.2 No. 14, GB/T14048.5

Technical data

Housing

Polyamide housing PA 66, self-extinguishing V0 acc. to UL 94	
Protection degree acc. to EN 60529:	IP40 (housing), IP20 (terminal strip)
Dimensions:	see page 135, design A

General data

Safety Integrity Level (SIL) up to:	Maximum SIL 3 acc. to EN 62061
Performance Level (PL) up to:	PL e acc. to EN ISO 13849-1
Safety category up to:	cat. 4 acc. to EN ISO 13849-1
Type of two-hand control device:	EN ISO 13851: type III C
Safety parameters:	See page 151
Ambient temperature:	-25°C…+55°C
Mechanical endurance:	>10 million operating cycles
Electrical endurance:	>100,000 operating cycles
Pollution degree:	external 3, internal 2
Rated impulse withstand voltage (U_{imp}):	4 kV
Rated insulation voltage (U_i):	250 V
Overvoltage category:	II

Power supply

Rated supply voltage (U_n):	24 Vac/dc; 50…60 Hz 120 Vac; 50…60 Hz 230 Vac; 50…60 Hz
Max. DC residual ripple in DC:	10%
Supply voltage tolerance:	±15% of U_n
Power consumption AC:	< 5 VA
Power consumption DC:	< 2 W

Control circuit

Protection against short circuits:	PTC resistance, Ih=0.5 A
PTC times:	response > 100 ms, reset > 3 s
Maximum resistance per input:	≤ 50 Ω
Current per input:	30 mA (typical)
Response time t_A:	< 50 ms
Release time t_{R1}:	< 20 ms
Release time in absence of power supply t_R:	< 90 ms
Time range for synchronised actuation t_{SN}:	< 0.5 s

Output circuit

Output contacts:	3 NO safety contacts, 1 NC auxiliary contact
Contact type:	forcibly guided
Material of the contacts:	silver alloy
Maximum switching voltage:	230/240 Vac; 300 Vdc
Utilization categories for output contacts:	AC-15 (50 ... 60 Hz), 230 V / 3 A DC-13 (6 oper. cycles/min.), 24 V / 4 A
Maximum conventional free air thermal current per branch I_{th}:	6 A
Max. total current ΣI_{th}^2:	64 A^2
Minimum current:	10 mA
Contact resistance:	≤ 100 mΩ
External protection fuse:	4 A

The number and the load capacity of output contacts can be increased by using expansion modules or contactors. See pages 75-84.

Code structure

CS DM-01V024

Connection type	
V	Screw terminals
M	Connector with screw terminals
X	Connector with spring terminals

Supply voltage	
024	24 Vac/dc
120	120 Vac
230	230 Vac

Features approved by UL

Rated supply voltage (U_n):	24 Vac/dc; 50…60 Hz 120 Vac; 50…60 Hz 230 Vac; 50…60 Hz
Power consumption AC:	< 5 VA
Power consumption DC:	< 2 W

Electrical ratings:
- NO contacts: 230/240 Vac, 6 A general use, C300 pilot duty
- NC contacts: 230/240 Vac, 6 A resistive, B300 pilot duty

Notes:
- Use 60 or 75°C copper (Cu) conductor and wire size No. 30-12 AWG, stranded or solid.
- The terminal tightening torque of 5-7 lb in.
- Only for 24 Vac/dc versions: supply from remote Class 2 source or limited voltage limited energy.

- Utiliser des conducteurs en cuivre (Cu) 60 ou 75°C rigides ou flexibles de section 30-12 AWG.
- Couple de serrage des bornes de 5-7 Lb In.
- Seulement pour les versions 24 Vac/dc, alimenter avec sources de classes 2 ou avec tension limitée et énergie limitée.

Safety module CS DM-01

Pin assignment

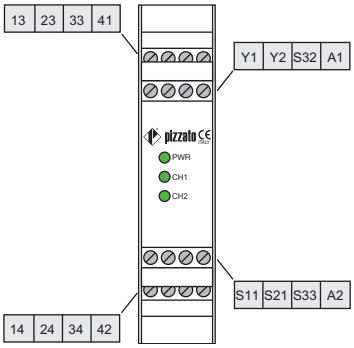

Function diagram

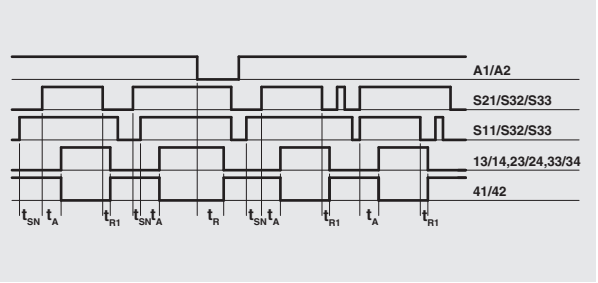

Legend:
t_{SN}: Time range for synchronised actuation
t_A: Response time
t_{R1}: Release time
t_R: Release time in absence of power supply

Internal wiring diagram

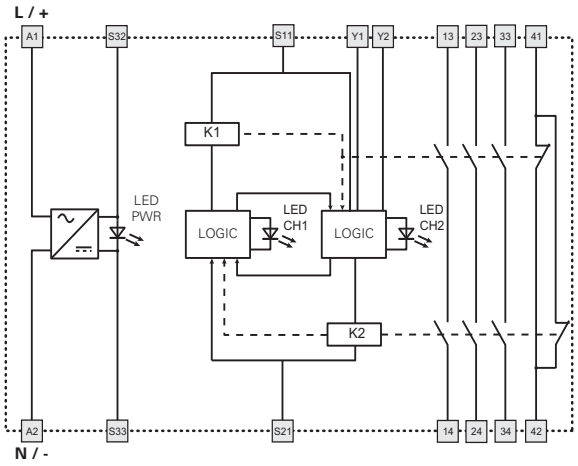

Application example on page 88.

Input configuration

Circuit with two-hand control device type III C according to EN ISO 13851

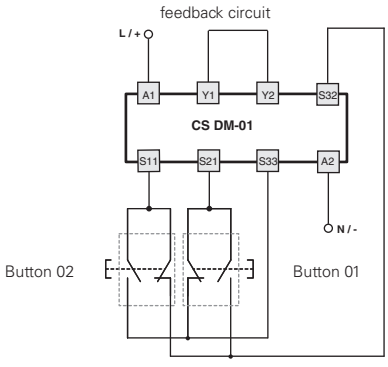

The diagram does not show the exact position of the terminals in the product

Movable guard monitoring with automatic start and simultaneity between channels < 0.5 s (safety category 4)

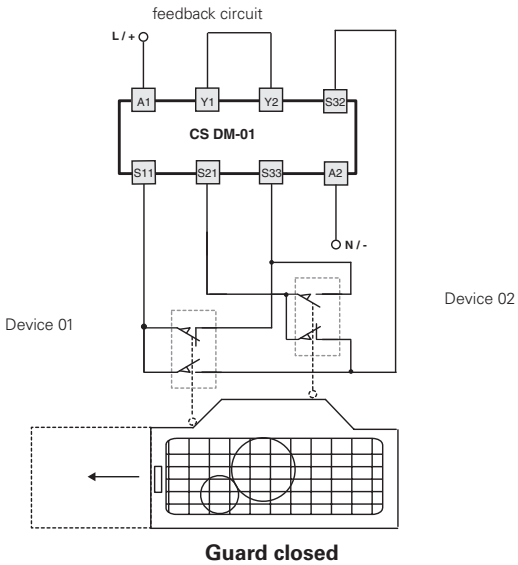

Safety module **CS DM-02**

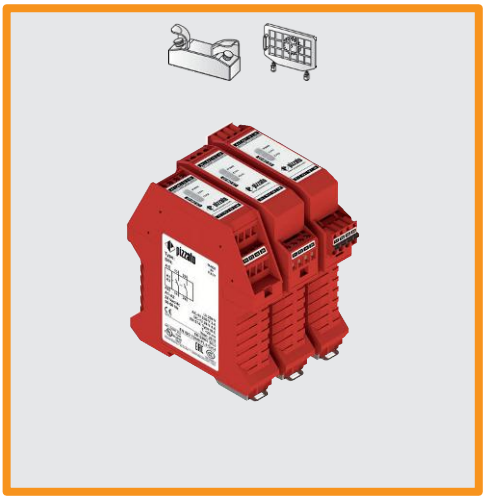

Two-hand control device according to EN ISO 13851: type III C or safety module with synchronism control

Main features

- For safety applications up to SIL 3/PL e
- Inputs: 2 channels, which can be connected to electromechanical contacts or for two-hand control
- Connection of input channels of opposite potentials
- Outputs: relay, 2NO safety
- Supply voltage: 24 Vac/dc, 120 Vac, 230 Vac

Quality marks:

EC type examination certificate: IMQ BP 210 DM
UL approval: E131787
CCC approval: 2024010305656748
EAC approval: RU Д-IT.PA07.B.37848/24

Compliance with the requirements of:
Machinery Directive 2006/42/EC,
EMC Directive 2014/30/EU,
RoHS Directive 2011/65/EU.

In compliance with standards:
EN 60204-1, EN ISO 14118, EN ISO 12100, EN ISO 13851, EN 60529, EN 61000-6-2, EN 61000-6-3, EN 61326-1, EN 60664-1, EN 60947-1, EN IEC 63000, EN ISO 13849-1, EN ISO 13849-2, EN 62061, UL 508, CSA C22.2 No. 14, GB/T14048.5

Technical data

Housing

Polyamide housing PA 66, self-extinguishing V0 acc. to UL 94	
Protection degree acc. to EN 60529:	IP40 (housing), IP20 (terminal strip)
Dimensions:	see page 135, design A

General data

Safety Integrity Level (SIL) up to:	Maximum SIL 3 acc. to EN 62061
Performance Level (PL) up to:	PL e acc. to EN ISO 13849-1
Safety category up to:	cat. 4 acc. to EN ISO 13849-1
Type of two-hand control device:	EN ISO 13851: type III C
Safety parameters:	See page 151
Ambient temperature:	-25°C…+55°C
Mechanical endurance:	>10 million operating cycles
Electrical endurance:	>100,000 operating cycles
Pollution degree:	external 3, internal 2
Rated impulse withstand voltage (U_{imp}):	4 kV
Rated insulation voltage (U_i):	250 V
Overvoltage category:	II

Power supply

Rated supply voltage (U_n):	24 Vac/dc; 50…60 Hz 120 Vac; 50…60 Hz 230 Vac; 50…60 Hz
Max. DC residual ripple in DC:	10%
Supply voltage tolerance:	±15% of U_n
Power consumption AC:	< 5 VA
Power consumption DC:	< 2 W

Control circuit

Protection against short circuits:	PTC resistance, Ih=0.5 A
PTC times:	response > 100 ms, reset > 3 s
Maximum resistance per input:	≤ 50 Ω
Current per input:	30 mA (typical)
Response time t_A:	< 30 ms
Release time t_{R1}:	< 25 ms
Release time in absence of power supply t_R:	< 90 ms
Time range for synchronised actuation t_{SN}:	< 0.5 s

Output circuit

Output contacts:	2 NO safety contacts
Contact type:	forcibly guided
Material of the contacts:	silver alloy
Maximum switching voltage:	230/240 Vac; 300 Vdc
Utilization categories for output contacts:	AC-15 (50 ... 60 Hz), 230 V / 3 A DC-13 (6 oper. cycles/min.), 24 V / 4 A
Maximum conventional free air thermal current per branch I_{th}:	6 A
Max. total current ΣI_{th}^2:	36 A^2
Minimum current:	10 mA
Contact resistance:	≤ 100 mΩ
External protection fuse:	4 A

The number and the load capacity of output contacts can be increased by using expansion modules or contactors. See pages 75-84.

Code structure

CS DM-02V024

Connection type		Supply voltage	
V	Screw terminals	**024**	24 Vac/dc
M	Connector with screw terminals	**120**	120 Vac
X	Connector with spring terminals	**230**	230 Vac

Features approved by UL

Rated supply voltage (U_n):	24 Vac/dc; 50…60 Hz 120 Vac; 50…60 Hz 230 Vac; 50…60 Hz
Power consumption AC:	< 5 VA
Power consumption DC:	< 2 W

Electrical ratings:
- NO contacts: 230/240 Vac, 6 A general use, C300 pilot duty
- NC contacts: 230/240 Vac, 6 A resistive, B300 pilot duty

Notes:
- Use 60 or 75°C copper (Cu) conductor and wire size No. 30-12 AWG, stranded or solid.
- The terminal tightening torque of 5-7 lb in.
- Only for 24 Vac/dc versions: supply from remote Class 2 source or limited voltage limited energy.

- Utiliser des conducteurs en cuivre (Cu) 60 ou 75°C rigides ou flexibles de section 30-12 AWG.
- Couple de serrage des bornes de 5-7 Lb In.
- Seulement pour les versions 24 Vac/dc, alimenter avec sources de classes 2 ou avec tension limitée et énergie limitée.

Safety module CS DM-02

Pin assignment

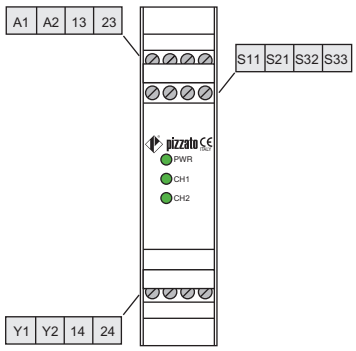

Function diagram

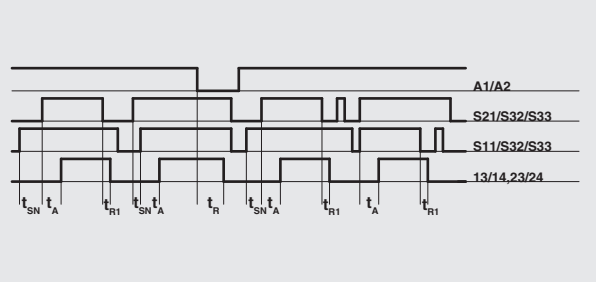

Legend:
t_{SN}: Time range for synchronised actuation
t_A: Response time
t_{R1}: Release time
t_R: Release time in absence of power supply

Internal wiring diagram

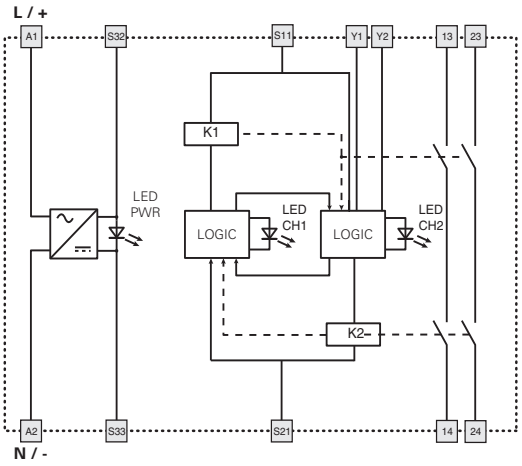

Application example on page 88.

Internal wiring diagram

Input configuration

Circuit with two-hand control device type III C according to EN ISO 13851

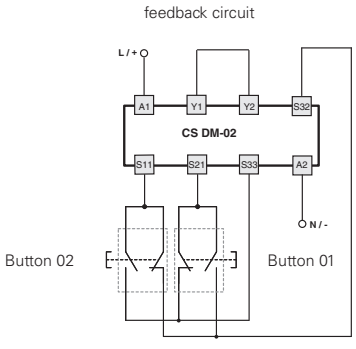

The diagram does not show the exact position of the terminals in the product

Movable guard monitoring with automatic start and simultaneity between channels < 0.5 s (safety category 4)

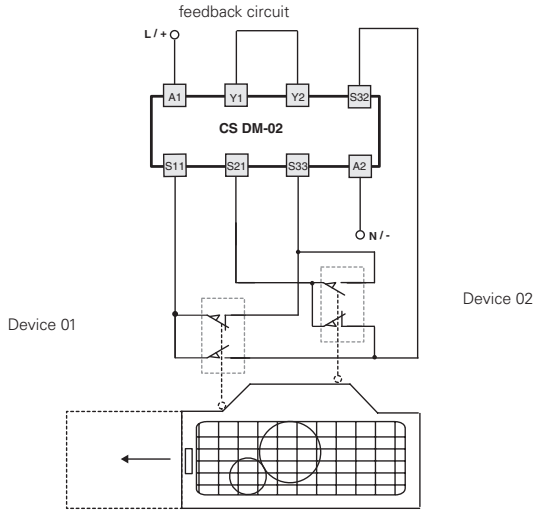

Guard closed

Safety module **CS DM-20**

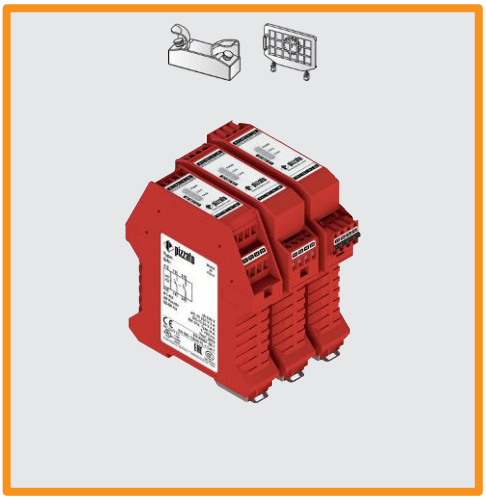

Two-hand control device according to EN ISO 13851: type III C or safety module with synchronism control

Main features

- For safety applications up to SIL 1/PL c
- Inputs: 2 channels, which can be connected to electromechanical contacts or for two-hand control
- Connection of input channels of opposite potentials
- Outputs: relay, 2NO safety
- Supply voltage: 24 Vac/dc, 120 Vac, 230 Vac

Quality marks:

UL approval:	E131787
CCC approval:	2024010305656748
EAC approval:	RU Д-IT.PA07.B.37848/24

Compliance with the requirements of:
Machinery Directive 2006/42/EC,
EMC Directive 2014/30/EU,
RoHS Directive 2011/65/EU.

In compliance with standards:
EN 60204-1, EN ISO 14118, EN ISO 12100, EN ISO 13851, EN 60529, EN 61000-6-2, EN 61000-6-3, EN 61326-1, EN 60664-1, EN 60947-1, EN IEC 63000, EN ISO 13849-1, EN ISO 13849-2, EN 62061, UL 508, CSA C22.2 No. 14, GB/T14048.5

Technical data

Housing

Polyamide housing PA 66, self-extinguishing V0 acc. to UL 94	
Protection degree acc. to EN 60529:	IP40 (housing), IP20 (terminal strip)
Dimensions:	see page 135, design A

General data

Safety Integrity Level (SIL) up to:	Maximum SIL 1 acc. to EN 62061
Performance Level (PL) up to:	PL c acc. to EN ISO 13849-1
Type of two-hand control device:	EN ISO 13851: type III A
Safety parameters:	See page 151
Ambient temperature:	-25°C…+55°C
Mechanical endurance:	>10 million operating cycles
Electrical endurance:	>100,000 operating cycles
Pollution degree:	external 3, internal 2
Rated impulse withstand voltage (U_{imp}):	4 kV
Rated insulation voltage (U_i):	250 V
Overvoltage category:	II

Power supply

Rated supply voltage (U_n):	24 Vac/dc; 50…60 Hz 120 Vac; 50…60 Hz 230 Vac; 50…60 Hz
Max. DC residual ripple in DC:	10%
Supply voltage tolerance:	±15% of U_n
Power consumption AC:	< 5 VA
Power consumption DC:	< 2 W

Control circuit

Protection against short circuits:	PTC resistance, Ih=0.5 A
PTC times:	response > 100 ms, reset > 3 s
Maximum resistance per input:	≤ 100 Ω
Current per input:	32 mA (typical)
Response time t_A:	< 20 ms
Release time t_{R1}:	< 20 ms
Release time in absence of power supply t_R:	< 200 ms
Time range for synchronised actuation t_{SN}:	< 0.5 s

Output circuit

Output contacts:	2 NO safety contacts
Contact type:	forcibly guided
Material of the contacts:	silver alloy
Maximum switching voltage:	230/240 Vac; 300 Vdc
Utilization categories for output contacts:	AC-15 (50 ... 60 Hz), 230 V / 3 A DC-13 (6 oper. cycles/min.), 24 V / 4 A
Maximum conventional free air thermal current per branch I_{th}:	6 A
Max. total current ΣI_{th}^2:	36 A²
Minimum current:	10 mA
Contact resistance:	≤ 100 mΩ
External protection fuse:	4 A

The number and the load capacity of output contacts can be increased by using expansion modules or contactors. See pages 75-84.

Code structure

CS DM-20V024

Connection type		Supply voltage	
V	Screw terminals	**024**	24 Vac/dc
M	Connector with screw terminals	**120**	120 Vac
X	Connector with spring terminals	**230**	230 Vac

Features approved by UL

Rated supply voltage (U_n):	24 Vac/dc; 50…60 Hz 120 Vac; 50…60 Hz 230 Vac; 50…60 Hz
Power consumption AC:	< 5 VA
Power consumption DC:	< 2 W

Electrical ratings:
- NO contacts: 230/240 Vac, 6 A general use, C300 pilot duty
- NC contacts: 230/240 Vac, 6 A resistive, B300 pilot duty

Notes:
- Use 60 or 75°C copper (Cu) conductor and wire size No. 30-12 AWG, stranded or solid.
- The terminal tightening torque of 5-7 lb in.
- Only for 24 Vac/dc versions: supply from remote Class 2 source or limited voltage limited energy.

- Utiliser des conducteurs en cuivre (Cu) 60 ou 75°C rigides ou flexibles de section 30-12 AWG.
- Couple de serrage des bornes de 5-7 Lb In.
- Seulement pour les versions 24 Vac/dc, alimenter avec sources de classes 2 ou avec tension limitée et énergie limitée.

Safety module CS DM-20

Pin assignment

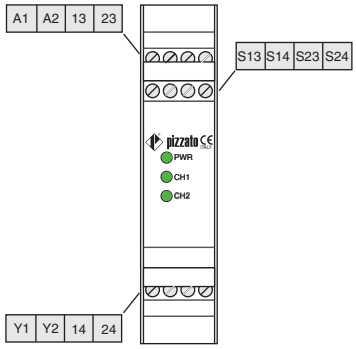

Function diagram

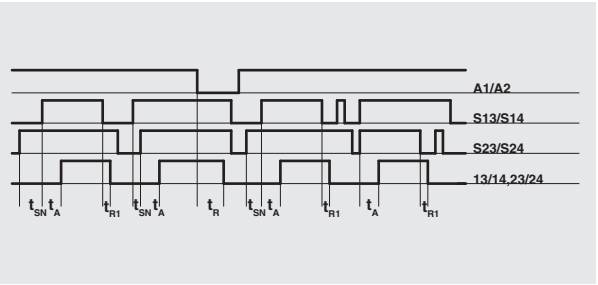

Legend:
t_{SN}: Time range for synchronised actuation
t_A: Response time
t_{R1}: Release time
t_R: Release time in absence of power supply

Internal wiring diagram

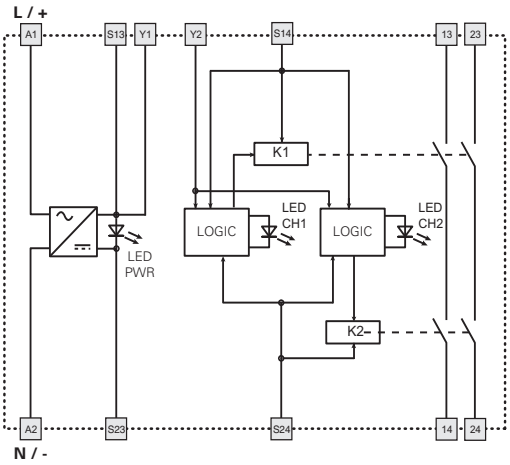

Input configuration

Circuit with two-hand control device type III A according to EN ISO 13851

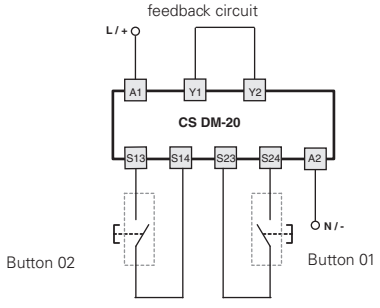

The diagram does not show the exact position of the terminals in the product

Movable guard monitoring with automatic start and simultaneity between channels < 0.5 s

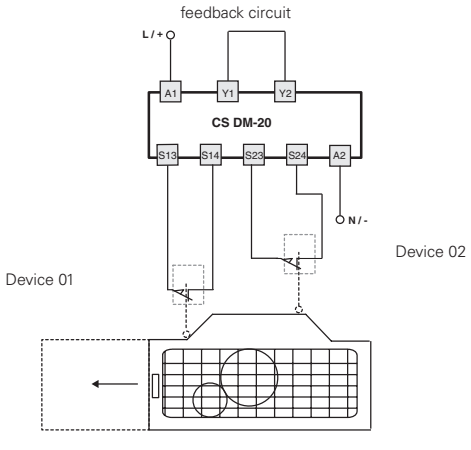

Guard closed

CS AM series safety modules

Introduction

The CS AM series of safety modules is a family of Pizzato products designed for the monitoring of electric motors. They can be used for the following safety functions: motor-standstill detection, monitoring of motor speed of rotation and monitoring of motor direction of rotation.
These modules can be used with DC or AC electric motors. Speed of rotation can be detected on AC motors generally (mono-phase and three phase), while direction of rotation can be detected on three-phase AC motors.

CS AM1• - Detection of motor standstill

CS AM1• modules enable detection of movement in motor, with safety outputs deactivating when the residual voltage at the ends of the motor windings is above a selected threshold. This technology enables detection of motor rotation even when it is not powered and turning due to inertia.

CS AM2• - Monitoring of motor speed and direction of rotation

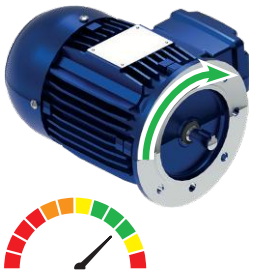

CS AM2• modules enable monitoring of motor speed of rotation by measuring the frequency on its phases. The safety outputs deactivate when the frequency measured falls outside the set range.

With a three-phase motor, it is also possible to detect the direction of rotation of the motor: the safety outputs deactivate when the direction of rotation is not as expected.

CS AM3• - Monitoring of motor standstill, speed and direction of rotation

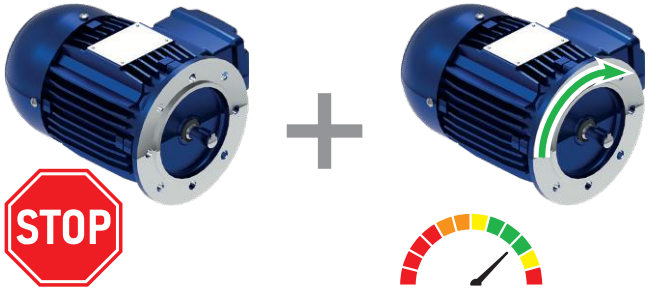

CS AM3• modules include all the safety functions of the new CS AM family: detection of motor standstill by measuring the residual voltage on motor phases, monitoring of motor speed via frequency measurement and identification of motor direction of rotation. CS AM3• modules provide the user with complete flexibility to configure safety functions according to the specific requirements of the application.

Sensorless monitoring

CS AM series modules use sensorless technology enabling various safety functions through direct connection of the CS AM module to the ends of the windings of the electric motor. The motor-standstill monitoring function is performed by monitoring the residual voltage generated by the rotating motor. The motor speed monitoring function is performed by measuring the frequency of the rotating magnetic field of the electric motor. By determining the phase shift between the voltages at the ends of two different windings, it is possible to identify the direction of rotation of the motor.

Additional diagnostics

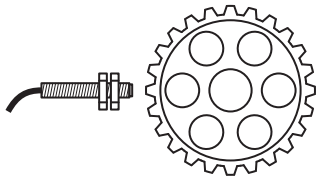

With CS AM series modules, a proximity sensor can be connected to input I4, setting up safety functions with additional diagnostics functions on mechanical transmission components. The proximity sensor must be positioned to detect the teeth of a tone wheel that is integral with the shaft driven by the mechanical transmission components. This makes it possible to detect events such as breakage of transmission belts or chains, and to identify situations in which the motor is overloaded or the rotor is blocked.

Combined safety functions

CS AM2• and CS AM3• series modules can combine the safety functions for detection of motor speed and direction of rotation. More specifically, it is possible to configure the **Dual Speed** combined function, which enables the user to set different speed thresholds for the two different directions of rotation, and the **Speed & Rotation** combined function, which activates the safety outputs of the module if the speed detected is within the set threshold and the direction of rotation is as expected.

OSSD safety outputs

CS AM series modules are also available with OSSD solid-state safety outputs. Modules equipped with OSSD solid-state safety outputs have the benefit of occupying less space in the switching cabinet. The width of modules ranges from 45 mm for relay versions to 22.5 mm for OSSD versions.

Two independent safety functions

CS AM2• and CS AM3• series modules are also available with two independent OSSD solid-state safety outputs or with two independent pairs of safety relays. With these models, it is therefore possible to create two different safety functions simultaneously, associating each function with one of the two available inputs.

CS AM Configurator

CS AM••P series modules can be configured with the CS AM Configurator software. The device can be connected to a PC using the USB-C connection port on the front of the module, enabling transfer of the desired configuration. This makes CS AM modules extremely flexible, with numerous parameters that can be set from the software, enabling configuration of the modules behaviour to suit many different applications.

Selection diagram

SAFETY FUNCTION

1
For motor standstill detection

2
For speed and motor-direction-of-rotation monitoring

3
For motor standstill, speed and motor-direction-of-rotation monitoring

OUTPUT CONTACTS

1
2 OSSD outputs

2
3 NO

3
3 NO + 3NO

4
2 NO + 1 NC

COMMUNICATION PORT

P
Programmable with USB port

F
Not programmable

CONNECTION TYPE

V
Screw terminals

M
Connector with screw terminals

X
Connector with spring terminals

SUPPLY VOLTAGE

U

Code structure

Attention! The feasibility of a code number does not mean the effective availability of a product. Please contact our sales office.

CS AM11P1MU-P•••

Safety function	
1	For motor standstill detection
2	For speed and motor-direction-of-rotation monitoring
3	For motor standstill, speed and motor-direction-of-rotation monitoring

Output contacts	
1	2 OSSD outputs
2	3 NO safety contacts
3	6 NO safety contacts
4	2 NO safety contacts, 1 NC contact

Communication port	
F	Not programmable
P	Programmable with USB port

Connection type	
V	Screw terminals
M	Connector with screw terminals
X	Connector with spring terminals

Supply voltage	
U	24 Vdc

Program code	
P•••	Program code number

Safety modules for motor standstill, speed and motor direction of rotation monitoring

Main features

- For safety applications up to SIL 3/PL e
- Galvanic separation between control circuit and measurement circuit
- Possibility to connect single-phase or three-phase motors to measuring circuits
- OSSD electronic safety outputs (CS AM•1) or relay safety outputs (CS AM•2, CS AM•3 and CS AM•4)
- 24 Vdc power supply
- Choice of sensitivity ranges for motor stand-still threshold
- Programmable modules with USB-C port (CS AM••P)
- Detection of motor standstill (CS AM1•)
- Monitoring of motor speed and direction of rotation (CS AM2• and CS AM3•)
- Additional diagnostics with the option to detect the integrity of the kinematic chain (CS AM1• and CS AM3•), overload and rotor lock (CS AM2• and CS AM3•) by adding a single proximity sensor.
- Option to combine multiple safety functions in a single module (CS AM2• and CS AM3•)

Quality marks:

EC type examination certificate:	M6A 075157 0039
UL approval:	E131787
EAC approval:	RU Д-IT.PA07.B.37848/24
TÜV SÜD approval:	Z10 075157 0038

Compliance with the requirements of:
Machinery Directive 2006/42/EC,
EMC Directive 2014/30/EU,
RoHS Directive 2011/65/EU.

In compliance with standards:
EN 60204-1, EN ISO 14118, EN ISO 12100, EN 60529, EN IEC 61000-6-2, EN IEC 61000-6-3, EN IEC 61326-1, EN IEC 60664-1, EN IEC 60947-1, EN 60947-5-1, EN IEC 63000, EN ISO 13849-1, EN ISO 13849-2, EN IEC 62061, UL 508, CSA C22.2 n°14, GB/T14048.5-2017

Technical data

Housing

Material:	Polyamide PA 66, self-extinguishing V0 acc. to UL 94
Protection degree:	IP40 (housing), IP20 (terminal strip)
Cable cross section:	0.2 … 2.5 mm² (24 … 12 AWG)
Terminal tightening torque:	0.5 … 0.6 Nm
Dimensions:	see page 135, design C

General data

Safety Integrity Level (SIL)	Suitable for applications up to "Maximum SIL 3" in accordance with IEC 62061:2021 and SIL3 in accordance with EN 61508:2010
Performance Level (PL)	Up to PL e acc. to EN ISO 13849-1:2023
Safety category	Up to cat. 4 acc. to EN ISO 13849-1:2023
Safety parameters:	See page 151
Mission time:	20 years
Ambient temperature:	-25°C … +55°C
Storage temperature:	-25°C … +70°C
Mechanical endurance (CS AM•2, CS AM•3):	10 million operating cycles
Pollution degree:	External 3, internal 2
Impulse withstand voltage U_{imp}:	6 kV (between motor inputs and 24 V / SELV signals) 4 kV (between phases of the motor input and between all relay contacts and 24 V / SELV signals) 2.5 kV (between the various relay contacts)
Rated insulation voltage U_i:	690 V (between motor inputs and 24 V signals, between motor phases) 250 V (between the relay contacts and between all relay contacts and the 24 V / SELV signals) 50 V (24 V / SELV connections)
Overvoltage category:	II
Air and surface distances:	Acc. to EN IEC 60947-1

Power supply electrical data

Rated operating voltage U_e:	24 Vdc
Supply voltage tolerance:	±15%
Maximum operating current at U_e voltage:	
CS AM•1	800 mA
CS AM•2 - CS AM•4	500 mA
CS AM•3	600 mA
External protection fuse:	2 A type gG or equivalent device

Electrical data of signalling inputs I3/I4

Rated operating voltage U_{e1}:	24 Vdc
Rated current consumption I_{e1}:	5 mA
Proximity sensor frequency (I4):	0.5 … 5000 Hz
Frequency detection accuracy (I4):	± 2%
Resolution (I4):	0.1 Hz
Duration of Start impulse t_i:	200 ms ÷ 10 s
Duration of Reset impulse t_{RESET}:	> 100 ms

Electrical data of O3/O4 signalling outputs

Rated operating voltage U_{e3}:	24 V_{dc}
Output type:	PNP
Maximum current per output I_{e3}:	0.1 A
Utilization category:	DC-13; U_{e3} = 24 V_{dc}, I_{e3} = 0.1 A
Short circuit detection:	No
Overvoltage protection:	Yes

Technical data

Electrical data of measurement outputs L1-L2-L3

Voltage between terminals L1-L2-L3:	0 … 690 Vac
Voltage between terminals L1-L2-L3 (CS AM2• and CS AM3•):	15 … 690 Vac
Frequency (CS AM1•):	0 … 3 kHz
Fundamental frequency (CS AM2• and CS AM3•):	0.5 … 1200 Hz
Inverter minimum PMW (CS AM2• and CS AM3•):	2 kHz
Hysteresis on frequency signal (CS AM2• and CS AM3•):	Adjustable from 2% to 10%
Started-motor threshold voltage V_H:	
• With trimmer enabled:	40 … 500 mV, adjustable in 10 increments 200 … 2000 mV, adjustable in 10 increments
• With trimmer disabled (via software):	40 … 2000 mV, adjustable
Motor-standstill threshold voltage V_L:	From 20 mV to 99% of V_H
Frequency measurement tolerance:	± 2%
Phase-shift threshold between f_{13} and f_{23} to establish the direction of rotation:	
• Clockwise rotation:	30° ÷ 90°
• Anti-clockwise rotation:	270° ÷ 330°
Input impedance:	> 1 MΩ

Electrical data of safety outputs OS1/OS2 (CS AM•1)

Rated operating voltage U_{e2}:	24 V_{dc}
Output type:	PNP type OSSD
Maximum current per output I_{e2}:	0.25 A
Minimum current per output I_{m2}:	0.5 mA
Thermal current I_{th2}:	0.25 A
Utilization category:	DC-13; U_{e2} = 24 V_{dc}, I_{e2} = 0.25 A
Short circuit detection:	Yes
Overcurrent protection:	Yes
Overvoltage protection:	Yes
Duration of the deactivation impulses at the safety outputs:	200 µs – 1 ms depending on capacitive load of the line
Permissible maximum capacitance between outputs:	< 1 µF
Permissible maximum capacitance between output and ground:	< 1 µF
Maximum EDM signal state change delay, t_{EDM}:	500 ms

Electrical data of safety relay outputs (CS AM•2, CS AM•3 and CS AM•4)

Output contacts (CS AM•2):	3NO
Output contacts (CS AM•3):	3NO + 3NO
Output contacts (CS AM•4):	2NO + 1NC
Contact type:	Forcibly guided acc. to EN 61810-3 (formerly EN 50205)
Material of the contacts:	Silver alloy
Maximum switching voltage:	230/240 Vac
Max. current per branch:	6 A
Conventional free air thermal current I_{th}:	6 A
Maximum sum of squared currents:	36 A^2
Minimum current:	10 mA
Contact resistance:	≤ 100 mΩ, at 1 A, 24 Vdc
External protection fuse:	4 A type gG
Maximum switching load per branch:	2000 VA
Electrical endurance:	> 100,000 operating cycles
Utilization categories acc. to EN 60947-5-1:	
– AC-15 (50 ... 60 Hz):	3 A, 250 Vac
– DC-13 (6 op. cycles/minute):	3 A, 24 Vdc
Utilization category acc. to UL 508:	R300, B300
Maximum EDM signal state change delay, t_{EDM}:	500 ms

Features approved by TÜV SÜD

Parameters: Safety Functions SF
- SF1 Standstill monitor
- SF2 Safe Speed Range Monitor
- SF3 Safe Direction Monitor

Tested according to: EN ISO 13849-1:2023
EN 61508-1:2010
EN 61508-2:2010
EN 61508-3:2010

Features approved by UL

Environmental ratings:

Open Type, maximum surrounding air 40°C.
Pollution degree 2.

Electrical ratings:

Power supply:	24 Vdc, Class 2 Source or limited voltage/current
Power Consumption:	< 20 W (for CS AM•1•1•U only)
Power Consumption:	< 10 W (for CS AM•3•1•U only)
Relay outputs: (for CS AM•2•1•U 3NO contacts, CS AM•3•1•U 3NO+3NO contacts and CS AM•4•1•U 2NO+1NC contacts only)	230/240 V_{ac}, 6 A general use. B300, R300 Pilot Duty. U_{imp}: 2.5kV.
Semiconductor outputs: (for CS AM•1•1•U only)	2 outputs rated 24 Vdc, 0.25 A each, resistive load. Supplied by Class 2 Source or limited voltage/current.
Auxiliary outputs:	2 outputs rated 24 Vdc, 0.10 A each, resistive load. Supplied by Class 2 Source or limited voltage/current.
Motor Input:	Three phases, three lines, 400 Vac (rms), 600 Vpeak. U_{imp}: 4kV.

Notes:
- Use 60 or 75 °C copper (CU) conductor and wire size No. 30-12 AWG, stranded or solid.
- The terminal tightening torque of 5 – 7 Lb-In.
- Supply from Remote Class 2 Source or limited voltage limited current.
- For use in Pollution Degree 2 Environment.
- U_{imp} 4kV Motor Input.
- U_{imp} 2.5kV Relays circuit.

Safety modules CS AM11 - CS AM12 - CS AM14

Terminal layout - CS AM11

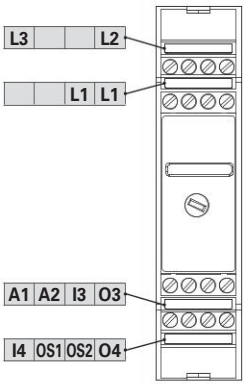

Terminal layout - CS AM12

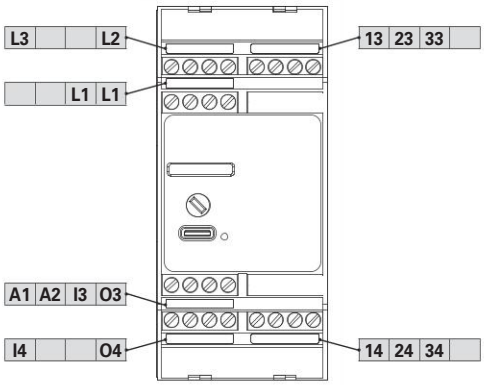

Terminal layout - CS AM14

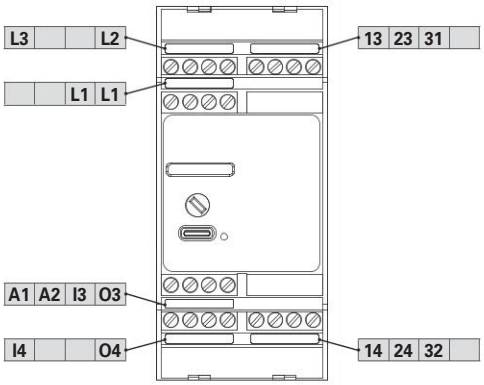

Safety modules CS AM21 - CS AM22 - CS AM23

Terminal layout - CS AM21

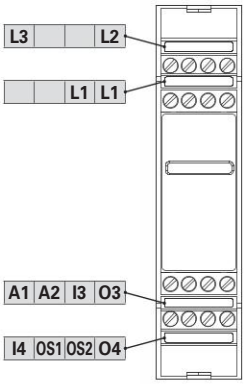

Terminal layout - CS AM22

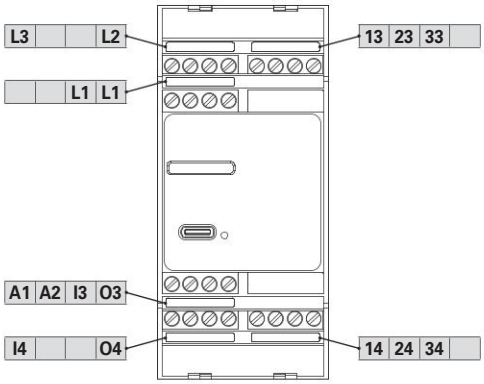

Terminal layout - CS AM23

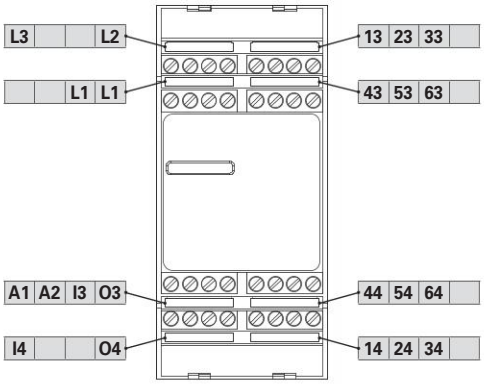

Safety modules CS AM31 - CS AM33

Terminal layout - CS AM31

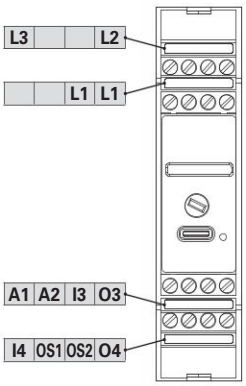

Terminal layout - CS AM33

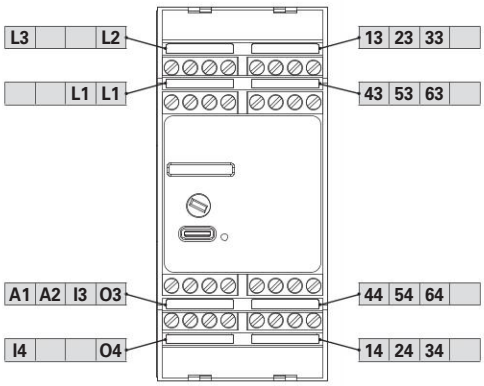

Backwards compatibility with model CS AM-01

Models CS AM1• can be used in place of the various versions of the Pizzato CS AM-01 motor standstill monitoring module. The list of codes for compatible modules is available at www.pizzato.com. For further details, please contact Pizzato Elettrica Technical Assistance.

Electrical connections

Connection		CS AM•1	CS AM•2	CS AM•3	CS AM•4
A1	Supply input +24 Vdc	■	■	■	■
A2	Supply input 0 V	■	■	■	■
I3	Configurable inputs	■	■	■	■
I4		■	■	■	■
O3	Configurable outputs	■	■	■	■
O4		■	■	■	■
L1	Motor phase 1	■	■	■	■
L2	Motor phase 2	■	■	■	■
L3	Motor phase 3	■	■	■	■
OS1	OSSD safety outputs	■			
OS2		■			
13-14	NO safety contacts		■	■	■
23-24			■	■	■
33-34			■	■	
43-44				■	
53-54				■	
63-64				■	
31-32	NC contact				■

Single-phase or DC motor

Without proximity sensor

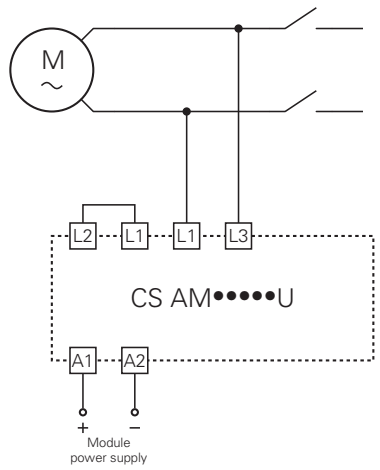

With proximity sensor

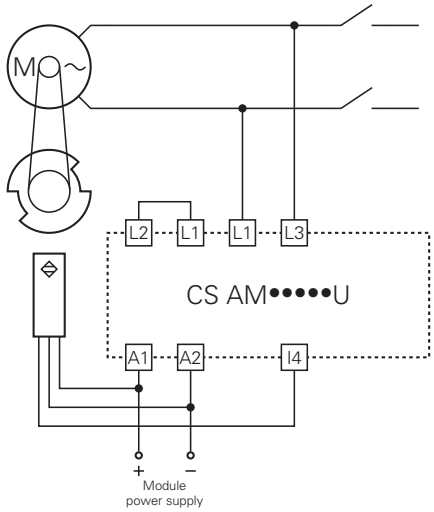

Three-phase motor

Without proximity sensor

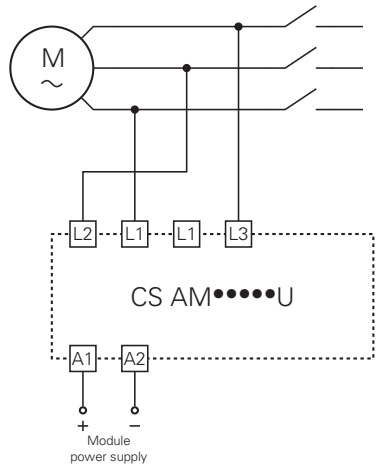

With proximity sensor

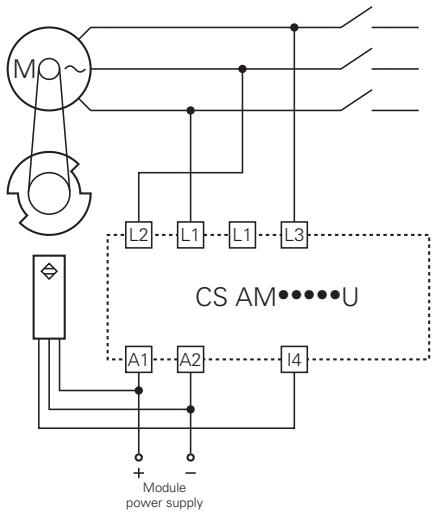

Internal wiring diagram

CS AM•1

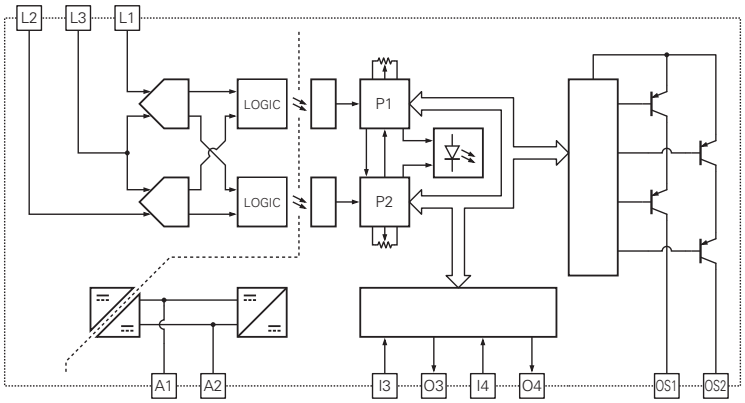

CS AM•2

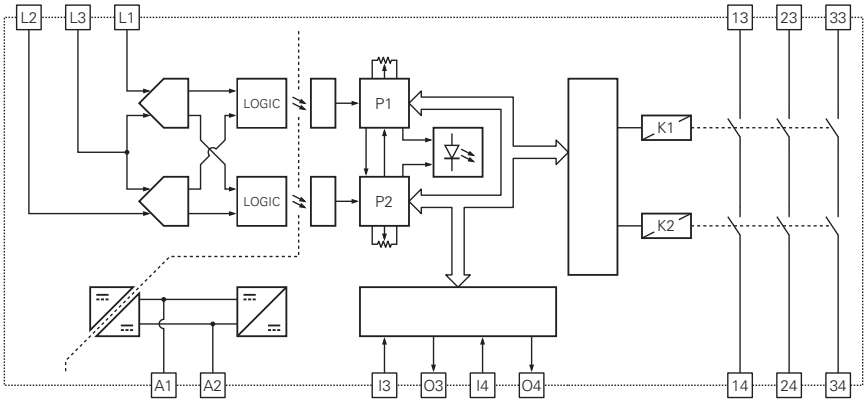

CS AM•3

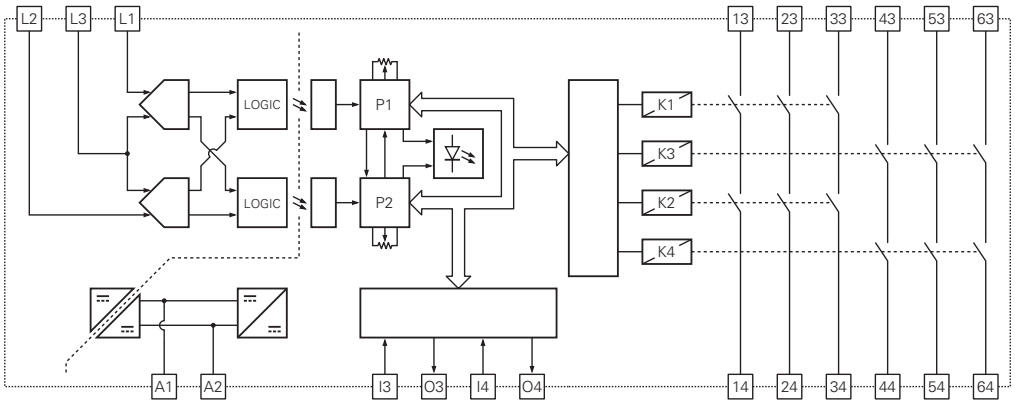

CS AM•4

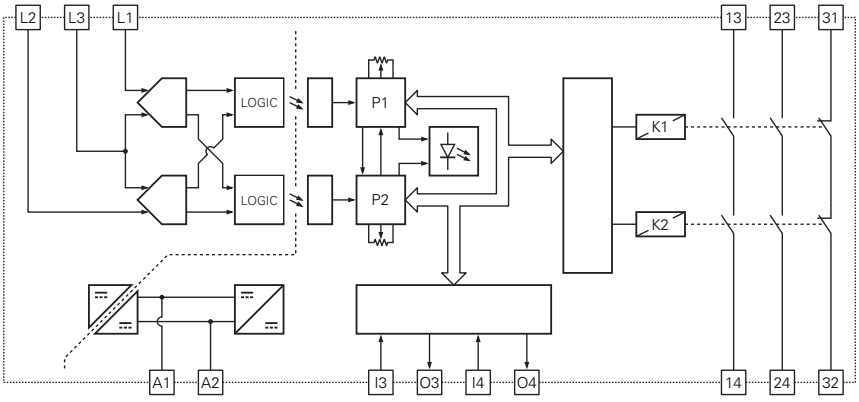

External device monitoring (EDM)

CS AM•1

EDM for CS AM with single safety function

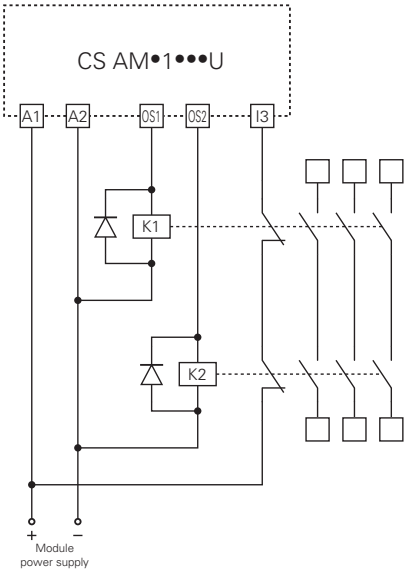

EDM for CS AM with dual safety function *

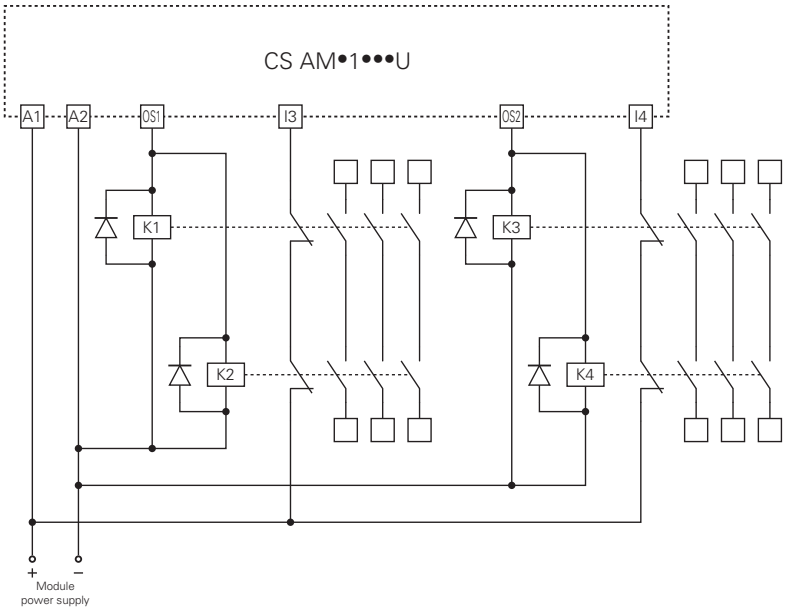

* Connection of the same OSSD of the CS AM module to the coils of two forcibly-guided contactors with contacts in series can be regarded as fault excluded since both are within the same housing. See table D.4, item D.2.4 of EN ISO 13849-2.

CS AM•2, CS AM•3 and CS AM•4

EDM for CS AM with single safety function

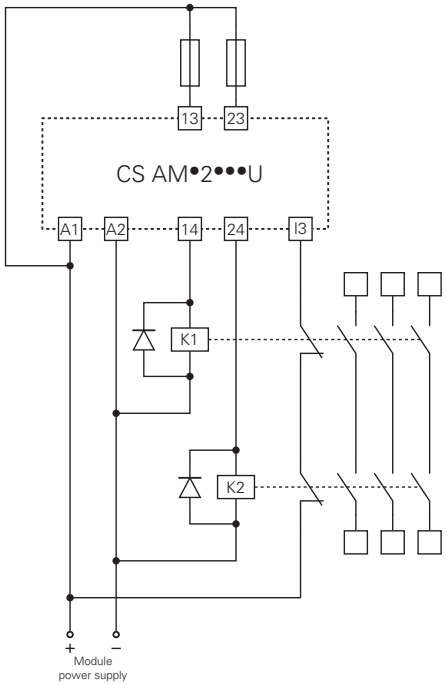

EDM for CS AM with dual safety function

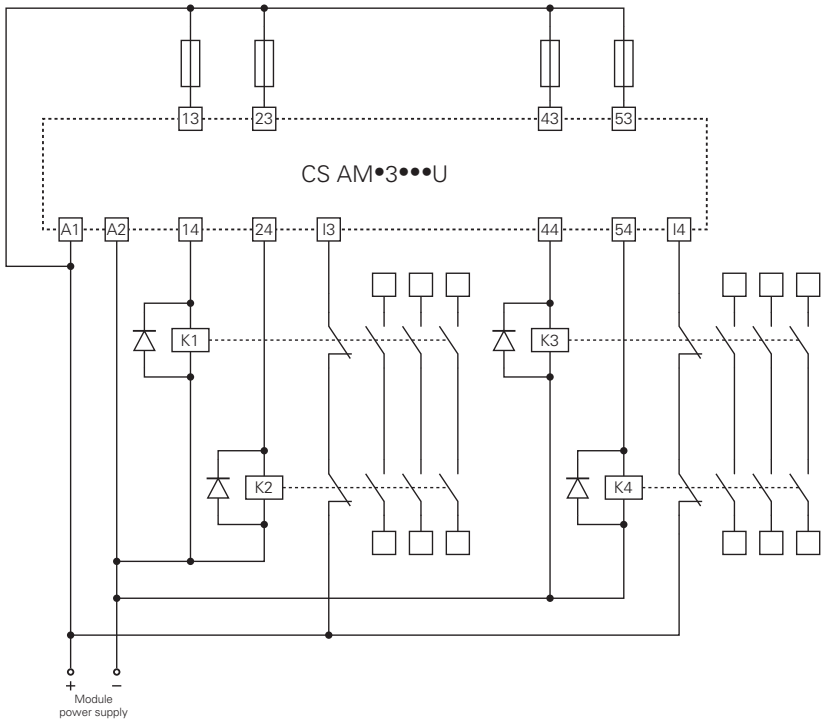

Motor standstill detection function

CS AM1• and CS AM3• series modules are capable of monitoring the motor standstill state by measuring the residual voltage generated by the rotating electric motor, e.g. when it is turning due to inertia. The module's safety outputs deactivate when the detected voltage is above the started-motor threshold.
Using the CS AM Configurator software and the trimmer on the front of the CS AM module, the threshold values for residual voltage can be set:
V_H: Started-motor threshold voltage
V_L: Motor-standstill threshold voltage

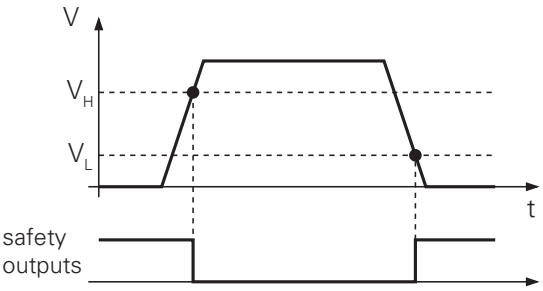

Speed monitoring function

By measuring the frequency of the phases of the electric motor, CS AM2• and CS AM3• series modules can monitor the speed of rotation of the motor. The module safety outputs deactivate when the speed detected is outside the frequency range set.

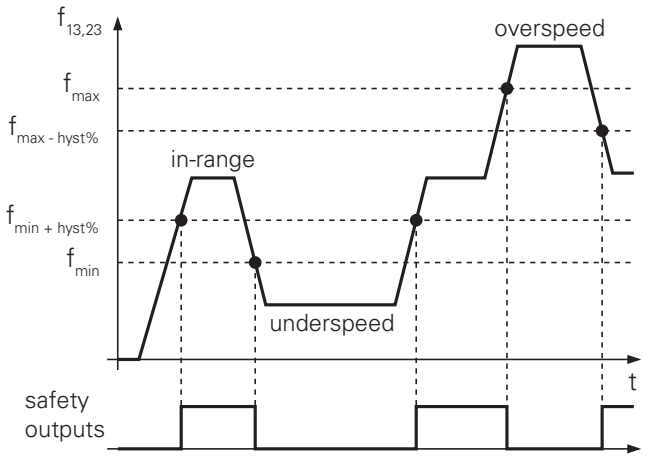

Direction-of-rotation detection function

By measuring the time difference between the pairs of phases at input, the modules of the CS AM2• and CS AM3• series are capable of detecting the direction of rotation of the motor.
This information enables various safety functions:
- **Rotation**: the safety outputs deactivate when the direction of rotation detected differs from that expected.
- **Speed & Rotation**: the safety outputs deactivate when the speed detected is outside the frequency range set or the direction of rotation is not as expected.
- **Dual Speed**: the safety outputs deactivate when the speed detected is outside the frequency range set for the specific direction of rotation. This makes it possible to set two permissible-speed ranges for the motor, one for clockwise rotation and one for anticlockwise rotation.

Optional transmission-component diagnostics function

By connecting a single proximity sensor, located so as to detect the speed of rotation directly on the shaft downstream of the transmission components to which the motor transfers motion, it is possible to check the coherence of the speed and the electrical measurements taken on the motor phases.
A discrepancy between the speed downstream of the transmission components (detected by the proximity sensor) and the speed detected upstream of the transmission components (measurement of voltage and frequency of motor phases) enables diagnosis of a fault or breakage of the transmission components themselves (e.g. gears, pulleys, belts or chains).
Combining this diagnostic function (optional) with the safety functions introduced above, enables the following combined functionality:
- **Motor standstill detection with proximity sensor:** the motor-standstill condition detected by measurement on the motor phases also requires that the proximity sensor detects that the shaft downstream of the transmission components stops before the safety outputs are activated.
- **Rotation-speed monitoring with proximity sensor:** comparing the rotation speed of the motor with the rotation speed of the shaft downstream of the transmission components enables detection of any motor block/overload or slippage/breakage of the transmission components.

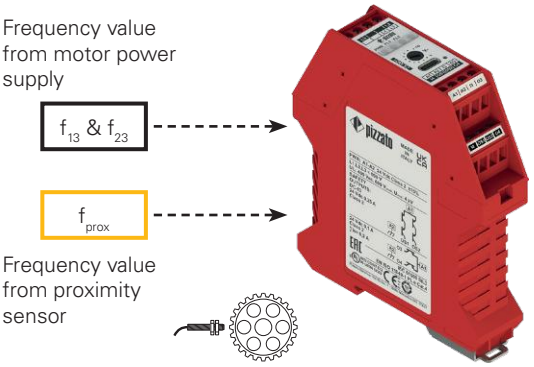

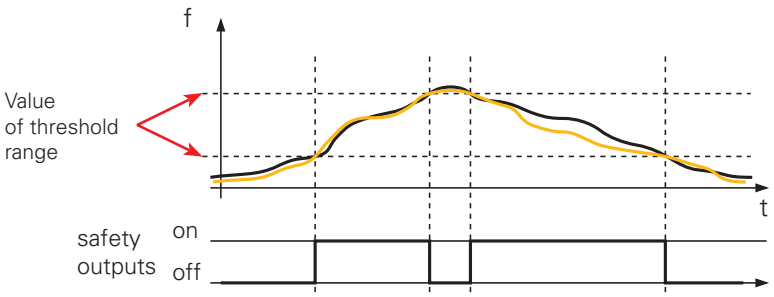

CS AM Configurator

CS AM••P safety modules are equipped with a USB Type-C port enabling their connection to a computer for configuration using the CS AM Configurator software, created by Pizzato Elettrica and available for free download by the user.

Configuration of parameters

Using the CS AM Configurator software, it is possible to configure the module outputs and inputs, set active functions and define the parameters according to the characteristics of the application and the motor. This makes the product highly flexible and adaptable for a great range of applications.

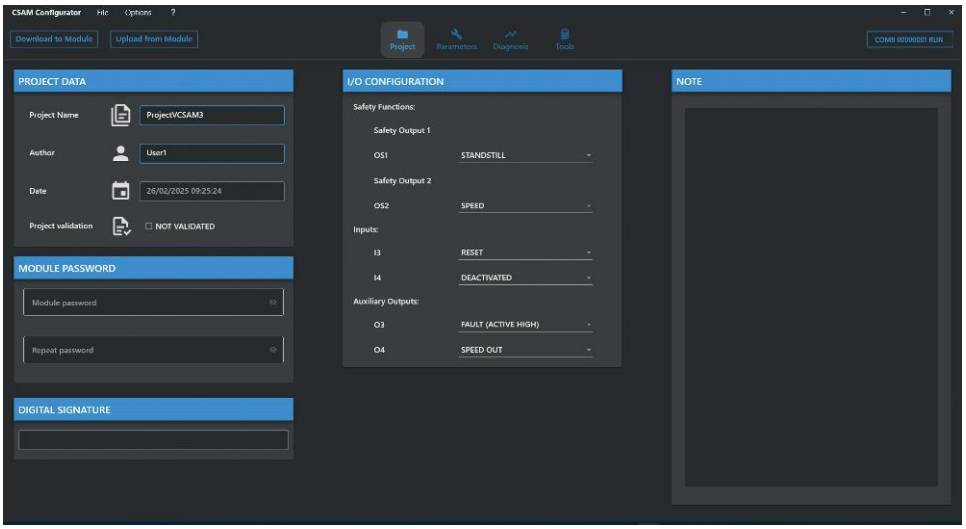

Real-time monitoring

Real-time monitoring of motor state and electrical measurements taken by the module.

This view allows real-time analysis of the behaviour of motor and module during use of the application, helping the user to check that the configuration of parameters effectively meets the requirements of their application.

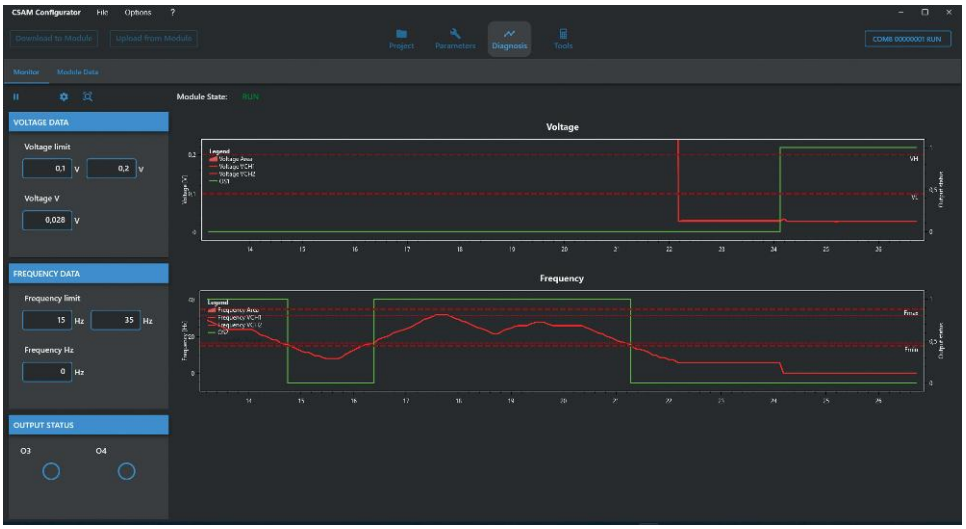

CS ME-01 expansion module

Expansion module with output contacts

Main features

- For safety applications up to SIL 3/PL e
- Possibility of control with one or two channels
- Connection of input channels of opposite potentials
- Outputs: relay, 5NO safety, 1NC signalling, 1NC feedback
- Supply voltage: 24 Vac/dc

Quality marks:

EC type examination certificate: IMQ CP 432 DM
UL approval: E131787
CCC approval: 2024010305656748
EAC approval: RU Д-IT.PA07.B.37848/24

Compliance with the requirements of:
Machinery Directive 2006/42/EC,
EMC Directive 2014/30/EU,
RoHS Directive 2011/65/EU.

In compliance with standards:
EN 60204-1, EN ISO 13855, EN ISO 14118,
EN ISO 12100, EN ISO 13850, EN 60529, EN 61000-6-2,
EN 61000-6-3, EN 61326-1, EN 60664-1, EN 60947-1,
EN IEC 63000, EN ISO 13849-1, EN ISO 13849-2,
EN 62061, UL 508, CSA C22.2 No. 14

Technical data

Housing

Polyamide housing PA 66, self-extinguishing V0 acc. to UL 94	
Protection degree acc. to EN 60529:	IP40 (housing), IP20 (terminal strip)
Dimensions:	see page 135, design A

General data

Safety Integrity Level (SIL) up to:	Maximum SIL 3 acc. to EN 62061
Performance Level (PL) up to:	PL e acc. to EN ISO 13849-1
Safety category up to:	cat. 4 acc. to EN ISO 13849-1 (see base module category)
Safety parameters:	See page 151
Ambient temperature:	-25°C…+55°C
Mechanical endurance:	>10 million operating cycles
Electrical endurance:	>100,000 operating cycles
Pollution degree:	external 3, internal 2
Rated impulse withstand voltage (U_{imp}):	4 kV
Rated insulation voltage (U_i):	250 V
Overvoltage category:	II

Power supply

Rated supply voltage U_n:	24 Vac/dc; 50…60 Hz
Max. DC residual ripple in DC:	10%
Supply voltage tolerance:	±15% of U_n
Power consumption AC:	< 5 VA
Power consumption DC:	< 2 W

Control circuit

Protection against short circuits:	PTC resistance, Ih=0.5 A
PTC times:	response > 100 ms, reset > 3 s
Maximum resistance per input:	≤ 50 Ω
Response time t_A:	< 40 ms
Release time in absence of power supply t_R:	< 50 ms

Output circuit

Output contacts:	5 NO safety contacts, 1 NC auxiliary contact, 1 NC feedback contact
Contact type:	forcibly guided
Material of the contacts:	silver alloy
Maximum switching voltage:	230/240 Vac; 300 Vdc
Utilization categories for output contacts:	AC-15 (50 ... 60 Hz), 230 V / 3 A DC-13 (6 oper. cycles/min.), 24 V / 4 A
Maximum conventional free air thermal current per branch I_{th}:	6 A
Max. total current ΣI_{th}^2:	72 A^2
Minimum current:	10 mA
Contact resistance:	≤ 100 mΩ
External protection fuse:	4 A

Code structure

CS ME-01V024

Connection type	
V	Screw terminals
M	Connector with screw terminals
X	Connector with spring terminals

Supply voltage	
024	24 Vac/dc

Features approved by UL

Rated supply voltage (U_n):	24 Vac/dc; 50…60 Hz
Power consumption AC:	< 5 VA
Power consumption DC:	< 2 W

Electrical ratings:
- NO contacts: 230/240 Vac, 6 A general use, C300 pilot duty
- NC contacts: 230/240 Vac, 6 A resistive, B300 pilot duty

Notes:
- Use 60 or 75°C copper (Cu) conductor and wire size No. 30-12 AWG, stranded or solid.
- The terminal tightening torque of 5-7 lb in.
- Only for 24 Vac/dc versions: supply from remote Class 2 source or limited voltage limited energy.

- Utiliser des conducteurs en cuivre (Cu) 60 ou 75°C rigides ou flexibles de section 30-12 AWG.
- Couple de serrage des bornes de 5-7 Lb In.
- Seulement pour les versions 24 Vac/dc, alimenter avec sources de classes 2 ou avec tension limitée et énergie limitée.

CS ME-01 expansion module

Pin assignment

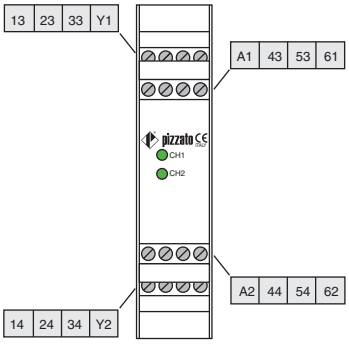

Function diagram

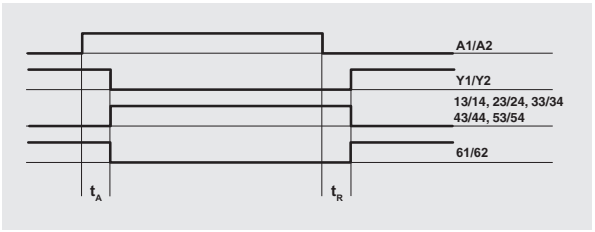

Legend:
t_A: Response time
t_R: Release time in absence of power supply

Internal wiring diagram

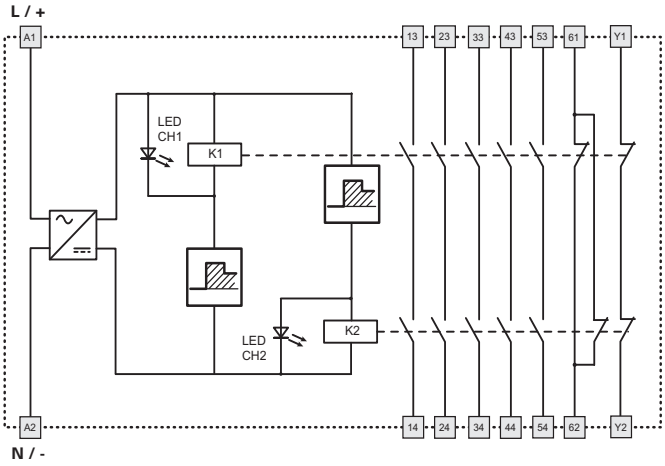

Input configuration

Single channel control	Double channel control

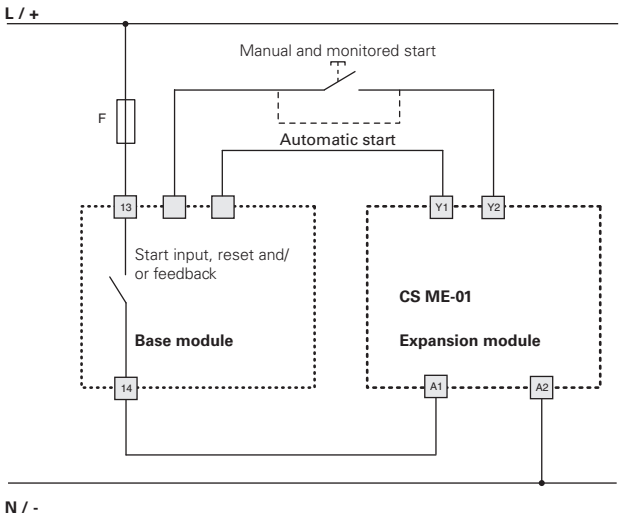

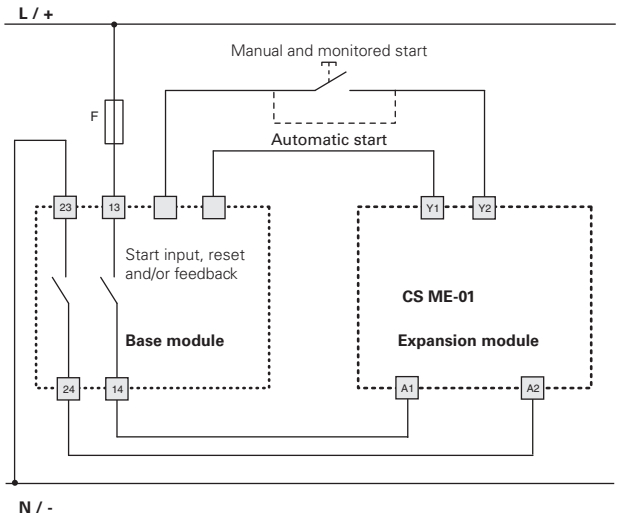

The diagram does not show the exact position of the terminals in the product

CS ME-02 expansion module

Expansion module with output contacts

Main features

- For safety applications up to SIL 3/PL e
- Possibility of control with one or two channels
- Connection of input channels of opposite potentials
- Outputs: relay, 4NO safety, 2NC signalling, 1NC feedback
- Supply voltage: 24 Vac/dc

Quality marks:

EC type examination certificate: IMQ CP 432 DM
UL approval: E131787
CCC approval: 2024010305656748
EAC approval: RU C-IT.УТ03.B.00035/19

Compliance with the requirements of:
Machinery Directive 2006/42/EC,
EMC Directive 2014/30/EU,
RoHS Directive 2011/65/EU.

In compliance with standards:
EN 60204-1, EN ISO 13855, EN ISO 14118,
EN ISO 12100, EN ISO 13850, EN 60529, EN 61000-6-2,
EN 61000-6-3, EN 61326-1, EN 60664-1, EN 60947-1,
EN IEC 63000, EN ISO 13849-1, EN ISO 13849-2,
EN 62061, UL 508, CSA C22.2 No. 14, GB/T14048.5

Technical data

Housing

Polyamide housing PA 66, self-extinguishing V0 acc. to UL 94	
Protection degree acc. to EN 60529:	IP40 (housing), IP20 (terminal strip)
Dimensions:	see page 135, design A

General data

Safety Integrity Level (SIL) up to:	Maximum SIL 3 acc. to EN 62061
Performance Level (PL) up to:	PL e acc. to EN ISO 13849-1
Safety category up to:	cat. 4 acc. to EN ISO 13849-1 (see base module category)
Safety parameters:	See page 151
Ambient temperature:	-25°C…+55°C
Mechanical endurance:	>10 million operating cycles
Electrical endurance:	>100,000 operating cycles
Pollution degree:	external 3, internal 2
Rated impulse withstand voltage (U_{imp}):	4 kV
Rated insulation voltage (U_i):	250 V
Overvoltage category:	II

Power supply

Rated supply voltage U_n:	24 Vdc
Max. DC residual ripple in DC:	10%
Supply voltage tolerance:	±15% of U_n
Power consumption DC:	< 2 W

Control circuit

Protection against short circuits:	PTC resistance, Ih=0.5 A
PTC times:	response > 100 ms, reset > 3 s
Maximum resistance per input:	≤ 50 Ω
Response time t_A:	< 100 ms
Release time in absence of power supply t_R:	< 60 ms

Output circuit

Output contacts:	4 NO safety contacts, 2 NC auxiliary contacts, 1 NC feedback contact
Contact type:	forcibly guided
Material of the contacts:	silver alloy
Maximum switching voltage:	230/240 Vac; 300 Vdc
Utilization categories for output contacts:	AC-15 (50 ... 60 Hz), 230 V / 3 A DC-13 (6 oper. cycles/min.), 24 V / 4 A
Maximum conventional free air thermal current per branch I_{th}:	6 A
Max. total current ΣI_{th}^2:	64 A^2
Minimum current:	10 mA
Contact resistance:	≤ 100 mΩ
External protection fuse:	4 A

Code structure

CS ME-02VU24

Connection type	
V	Screw terminals
M	Connector with screw terminals
X	Connector with spring terminals

Supply voltage	
U24	24 Vdc

Features approved by UL

Rated supply voltage (U_n):	24 Vdc
Power consumption DC:	< 2 W

Electrical ratings:
- NO contacts: 230/240 Vac, 6 A general use, C300 pilot duty
- NC contacts: 230/240 Vac, 6 A resistive, B300 pilot duty

Notes:
- Use 60 or 75°C copper (Cu) conductor and wire size No. 30-12 AWG, stranded or solid.
- The terminal tightening torque of 5-7 lb in.
- Only for 24 Vac/dc versions: supply from remote Class 2 source or limited voltage limited energy.

- Utiliser des conducteurs en cuivre (Cu) 60 ou 75°C rigides ou flexibles de section 30-12 AWG.
- Couple de serrage des bornes de 5-7 Lb In.
- Seulement pour les versions 24 Vac/dc, alimenter avec sources de classes 2 ou avec tension limitée et énergie limitée.

CS ME-02 expansion module

Pin assignment

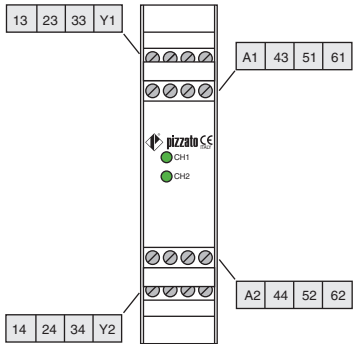

Function diagram

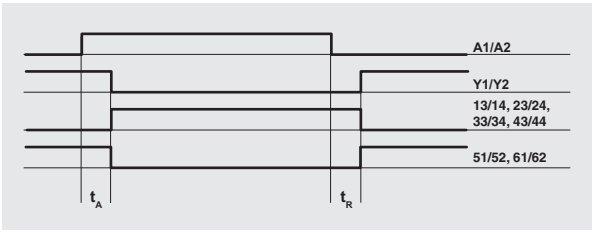

Legend:
t_A: Response time
t_R: Release time in absence of power supply

Internal wiring diagram

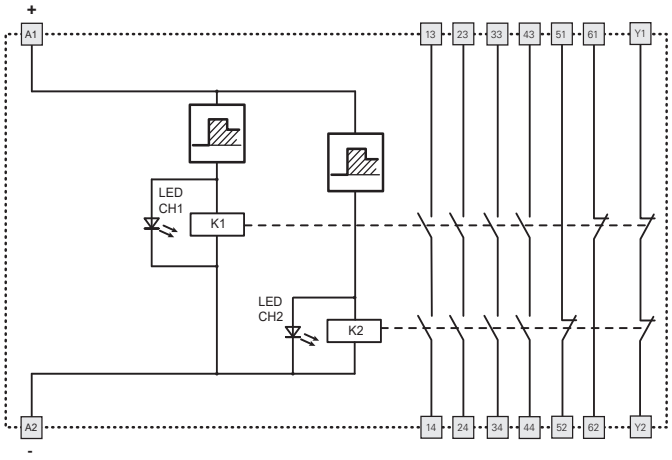

Input configuration

Single channel control	Double channel control

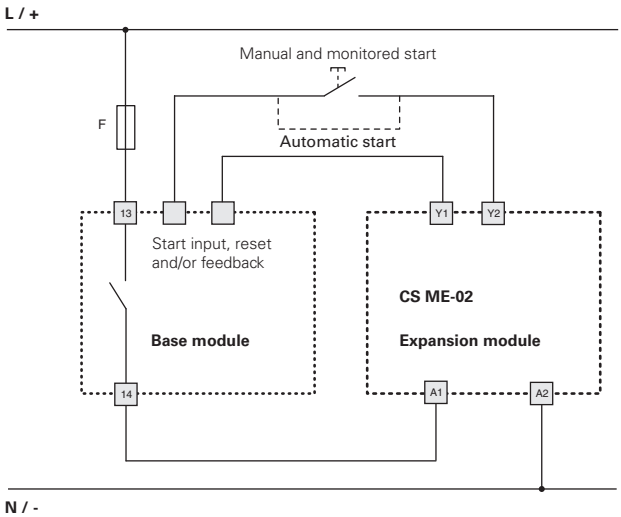

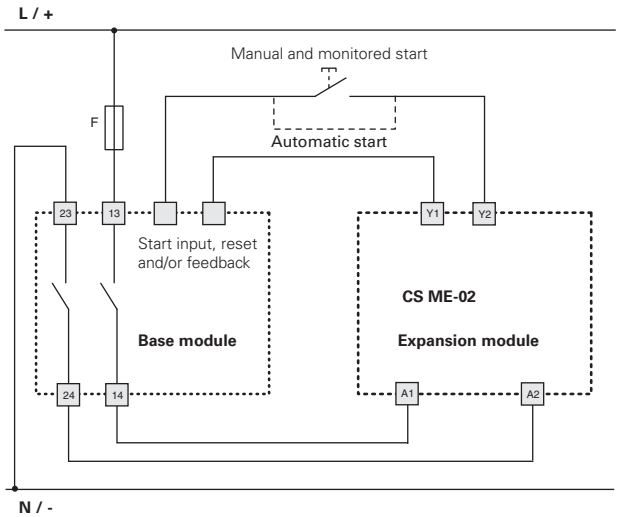

The diagram does not show the exact position of the terminals in the product

CS ME-03 expansion module

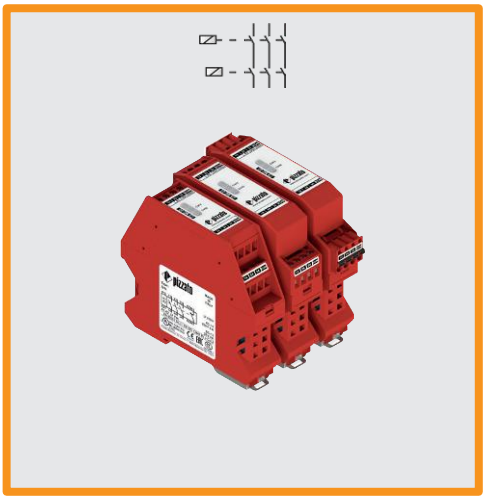

Expansion module with output contacts

Main features

- For safety applications up to SIL 3/PL e
- Inputs: 2 OSSD solid state
- Outputs: relay, 3NO safety, 1NC feedback/ EDM
- Supply voltage: 24 Vac/dc

Quality marks:

EC type examination certificate: IMQ CP 432 DM
UL approval: E131787
CCC approval: 2024010305656748
EAC approval: RU C-IT.УТ03.B.00035/19

Compliance with the requirements of:
Machinery Directive 2006/42/EC,
EMC Directive 2014/30/EU,
RoHS Directive 2011/65/EU.

In compliance with standards:
EN 60204-1, EN ISO 13855, EN ISO 14118,
EN ISO 12100, EN ISO 13850, EN 60529, EN 61000-6-2,
EN 61000-6-3, EN 61326-1, EN 60664-1, EN 60947-1,
EN IEC 63000, EN ISO 13849-1, EN ISO 13849-2,
EN 62061, UL 508, CSA C22.2 No. 14, GB/T14048.5

Technical data

Housing

Polyamide housing PA 66, self-extinguishing V0 acc. to UL 94	
Protection degree acc. to EN 60529:	IP40 (housing), IP20 (terminal strip)
Dimensions:	see page 135, design D

General data

Safety Integrity Level (SIL) up to:	Maximum SIL 3 acc. to EN 62061
Performance Level (PL) up to:	PL e acc. to EN ISO 13849-1
Safety category up to:	cat. 4 acc. to EN ISO 13849-1 (dependent on semiconductor outputs)
Safety parameters:	See page 151
Ambient temperature:	-25°C…+55°C
Mechanical endurance:	>10 million operating cycles
Electrical endurance:	>100,000 operating cycles
Pollution degree:	external 3, internal 2
Rated impulse withstand voltage (U_{imp}):	4 kV
Rated insulation voltage (U_i):	250 V
Overvoltage category:	II

Input circuit

Rated input voltage (U_n):	24 Vdc
Max. DC residual ripple in DC:	10%
Tolerance of the input voltage:	±15% of U_n
Power consumption DC:	< 2 W
Consumption at start:	< 3 W

Control circuit

Response time t_A:	< 40 ms
Release time t_{R1}:	< 20 ms

Output circuit

Output contacts:	3 NO safety contacts, 1 NC feedback contact
Contact type:	forcibly guided
Material of the contacts:	silver alloy
Maximum switching voltage:	230/240 Vac; 300 Vdc
Utilization categories for output contacts:	AC-15 (50 ... 60 Hz), 230 V / 3 A DC-13 (6 oper. cycles/min.), 24 V / 4 A
Maximum conventional free air thermal current per branch I_{th}:	6 A
Max. total current ΣI_{th}^2:	36 A²
Minimum current:	10 mA
Contact resistance:	≤ 100 mΩ
External protection fuse:	4 A

Code structure

CS ME-03VU24

Connection type	
V	Screw terminals
M	Connector with screw terminals
X	Connector with spring terminals

Supply voltage	
U24	24 Vdc

Features approved by UL

Rated supply voltage (U_n):	24 Vdc
Power consumption DC:	< 2 W

Electrical ratings:
- NO contacts: 230/240 Vac, 6 A general use, C300 pilot duty
- NC contacts: 230/240 Vac, 6 A resistive, B300 pilot duty

Notes:
- Use 60 or 75°C copper (Cu) conductor and wire size No. 30-12 AWG, stranded or solid.
- The terminal tightening torque of 5-7 lb in.
- Only for 24 Vac/dc versions: supply from remote Class 2 source or limited voltage limited energy.

- Utiliser des conducteurs en cuivre (Cu) 60 ou 75°C rigides ou flexibles de section 30-12 AWG.
- Couple de serrage des bornes de 5-7 Lb In.
- Seulement pour les versions 24 Vac/dc, alimenter avec sources de classes 2 ou avec tension limitée et énergie limitée.

CS ME-03 expansion module

Pin assignment

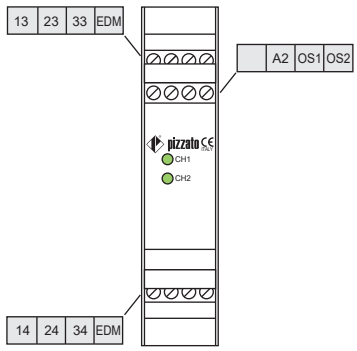

Function diagram

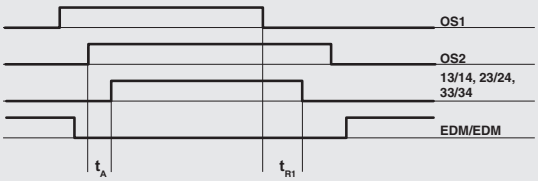

Legend:
t_A: Response time
t_{R1}: Release time

Internal wiring diagram

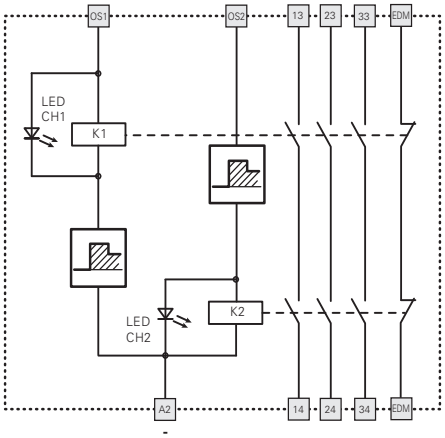

Application example on page 87.

Input configuration

OSSD semiconductor outputs (e.g. ST, NS, NG series or light barriers)	
1 channel	2 channels

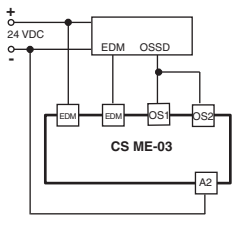

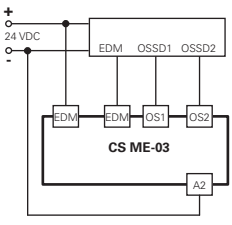

The diagram does not show the exact position of the terminals in the product

CS ME-20 expansion module

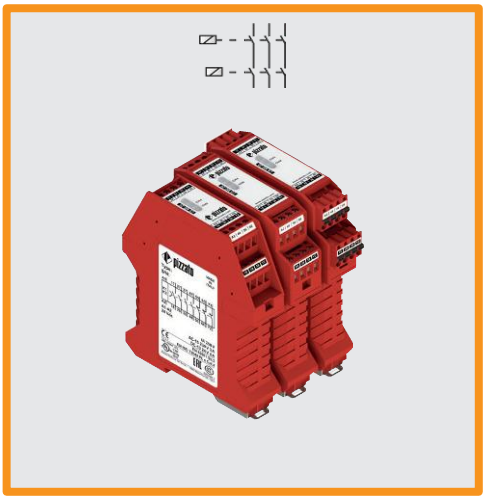

Expansion module with delayed output contacts at de-energizing

Main features

- For safety applications up to SIL 3/PL e
- Possibility of control with one or two channels
- 4 delay times 0.5 - 1 - 2 and 3 s
- Outputs: relay, 4NO safety, 2NC signalling, 1NC feedback
- Supply voltage: 24 Vac/dc

Quality marks:

EC type examination certificate: IMQ CP 432 DM
UL approval: E131787
CCC approval: 2024010305656748
EAC approval: RU C-IT.УТ03.B.00035/19

Compliance with the requirements of:
Machinery Directive 2006/42/EC,
EMC Directive 2014/30/EU,
RoHS Directive 2011/65/EU.

In compliance with standards:
EN 60204-1, EN ISO 13855, EN ISO 14118,
EN ISO 12100, EN ISO 13850, EN 60529, EN 61000-6-2,
EN 61000-6-3, EN 61326-1, EN 60664-1, EN 60947-1,
EN IEC 63000, EN ISO 13849-1, EN ISO 13849-2,
EN 62061, UL 508, CSA C22.2 No. 14, GB/T14048.5

Technical data

Housing

Polyamide housing PA 66, self-extinguishing V0 acc. to UL 94	
Protection degree acc. to EN 60529:	IP40 (housing), IP20 (terminal strip)
Dimensions:	see page 135, design A

General data

Safety Integrity Level (SIL) up to:	Maximum SIL 3 acc. to EN 62061
Performance Level (PL) up to:	PL e acc. to EN ISO 13849-1
Safety category up to:	cat. 4 acc. to EN ISO 13849-1 (see base module category)
Safety parameters:	See page 151
Ambient temperature:	-25°C…+55°C
Mechanical endurance:	>10 million operating cycles
Electrical endurance:	>100,000 operating cycles
Pollution degree:	external 3, internal 2
Rated impulse withstand voltage (U_{imp}):	4 kV
Rated insulation voltage (U_i):	250 V
Overvoltage category:	II

Power supply

Rated supply voltage U_n:	24 Vdc
Max. DC residual ripple in DC:	10%
Supply voltage tolerance:	±15% of U_n
Power consumption DC:	< 2 W

Control circuit

Maximum resistance per input:	≤ 50 Ω
Response time t_A:	< 120 ms
Release time in absence of power supply t_R:	see Code structure

Output circuit

Output contacts:	4 NO safety contacts, 2 NC auxiliary contacts, 1 NC feedback contact
Contact type:	forcibly guided
Material of the contacts:	silver alloy
Maximum switching voltage:	230/240 Vac; 300 Vdc
Utilization categories for output contacts:	AC-15 (50 ... 60 Hz), 230 V / 3 A DC-13 (6 oper. cycles/min.), 24 V / 4 A
Maximum conventional free air thermal current per branch I_{th}:	6 A
Max. total current ΣI_{th}^2:	64 A²
Minimum current:	10 mA
Contact resistance:	≤ 100 mΩ
External protection fuse:	4 A

Code structure

CS ME-20VU24-TF1

Connection type	
V	Screw terminals
M	Connector with screw terminals
X	Connector with spring terminals

Release time in absence of power supply (t_R)	
TF0.5	0.5 s fixed time
TF1	1 s fixed time
TF2	2 s fixed time
TF3	3 s fixed time

Features approved by UL

Rated supply voltage (U_n): 24 Vdc
Power consumption DC: < 2 W
Electrical ratings:
- NO contacts: 230/240 Vac, 6 A general use, C300 pilot duty
- NC contacts: 230/240 Vac, 6 A resistive, B300 pilot duty

Notes:
- Use 60 or 75°C copper (Cu) conductor and wire size No. 30-12 AWG, stranded or solid.
- The terminal tightening torque of 5-7 lb in.
- Only for 24 Vac/dc versions: supply from remote Class 2 source or limited voltage limited energy.

- Utiliser des conducteurs en cuivre (Cu) 60 ou 75°C rigides ou flexibles de section 30-12 AWG.
- Couple de serrage des bornes de 5-7 Lb In.
- Seulement pour les versions 24 Vac/dc, alimenter avec sources de classes 2 ou avec tension limitée et énergie limitée.

CS ME-20 expansion module

Pin assignment

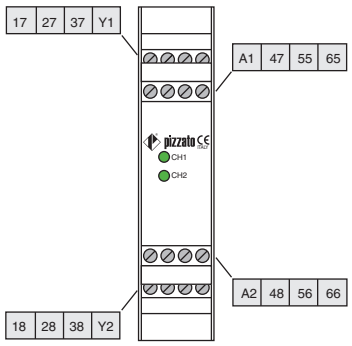

Function diagram

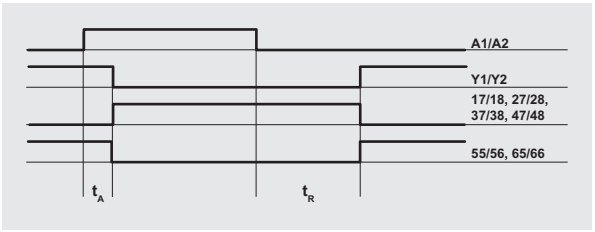

Legend:
t_A: response time
t_R: release time in absence of power supply
(see "Code structure")

Internal wiring diagram

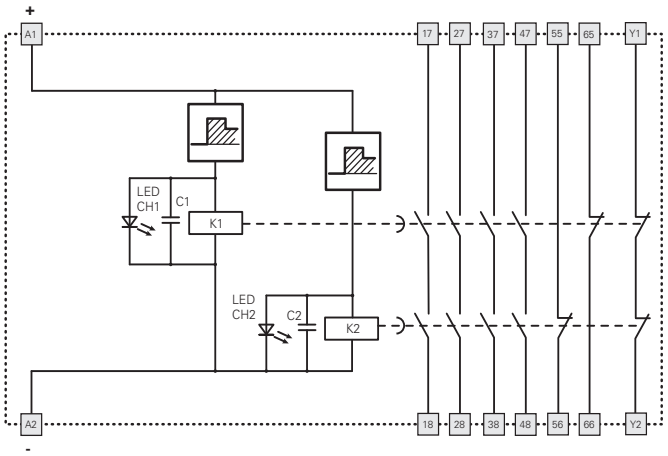

Input configuration

Single channel control

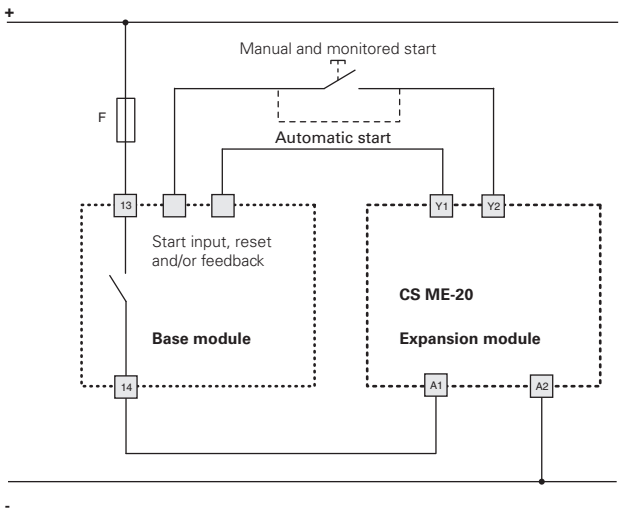

Double channel control

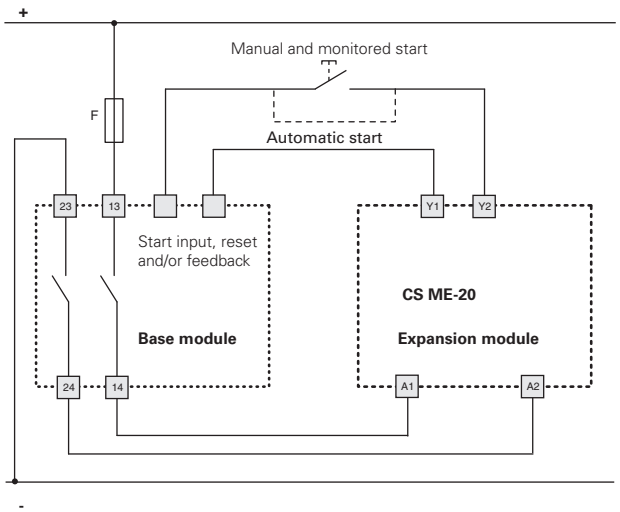

The diagram does not show the exact position of the terminals in the product

CS ME-31 expansion module

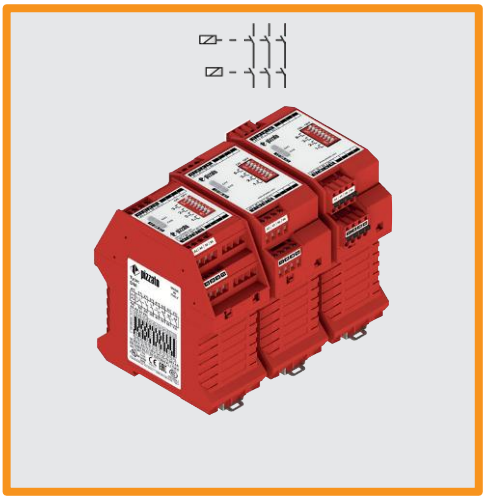

Expansion module with delayed output contacts at de-energizing

Main features

- For safety applications up to SIL 3/PL e
- Possibility of control with one or two channels
- Adjustable delay time
- Outputs: relay, 4NO safety, 2NC signalling, 1NC feedback
- Supply voltage: 24 Vac/dc

Quality marks:

EC type examination certificate: IMQ CP 432 DM
UL approval: E131787
CCC approval: 2024010305656748
EAC approval: RU C-IT.УТ03.B.00035/19

Compliance with the requirements of:
Machinery Directive 2006/42/EC,
EMC Directive 2014/30/EU,
RoHS Directive 2011/65/EU.

In compliance with standards:
EN 60204-1, EN ISO 13855, EN ISO 14118,
EN ISO 12100, EN ISO 13850, EN 60529, EN 61000-6-2,
EN 61000-6-3, EN 61326-1, EN 60664-1, EN 60947-1,
EN IEC 63000, EN ISO 13849-1, EN ISO 13849-2,
EN 62061, UL 508, CSA C22.2 No. 14, GB/T14048.5

Technical data

Housing

Polyamide housing PA 66, self-extinguishing V0 acc. to UL 94	
Protection degree acc. to EN 60529:	IP40 (housing), IP20 (terminal strip)
Dimensions:	see page 135, design C

General data

Safety Integrity Level (SIL) up to:	Maximum SIL 3 acc. to EN 62061
Performance Level (PL) up to:	PL e acc. to EN ISO 13849-1
Safety category up to:	cat. 4 acc. to EN ISO 13849-1 (see base module category)
Safety parameters:	See page 151
Ambient temperature:	-25°C…+55°C
Mechanical endurance:	>10 million operating cycles
Electrical endurance:	>100,000 operating cycles
Pollution degree:	external 3, internal 2
Rated impulse withstand voltage (U_{imp}):	4 kV
Rated insulation voltage (U_i):	250 V
Overvoltage category:	II

Power supply

Rated supply voltage (U_n):	24 Vdc
Max. DC residual ripple in DC:	10%
Supply voltage tolerance:	±15% of U_n
Power consumption DC:	< 2 W

Control circuit

Maximum resistance per input:	≤ 50 Ω
Response time t_A:	< 200 ms
Release time in absence of power supply t_R:	see Code structure

Output circuit

Output contacts:	4 NO safety contacts, 2 NC auxiliary contacts, 1 NC feedback contact
Contact type:	forcibly guided
Material of the contacts:	silver alloy
Maximum switching voltage:	230/240 Vac; 300 Vdc
Max. current per 1 NC contact:	< 6 A
Utilization categories for output contacts:	AC-15 (50 ... 60 Hz), 230 V / 3 A DC-13 (6 oper. cycles/min.), 24 V / 4 A
Maximum conventional free air thermal current per branch I_{th}:	6 A
Max. total current Σ I_{th}^2:	64 A²
Minimum current:	10 mA
Contact resistance:	≤ 100 mΩ
External protection fuse:	4 A

Code structure

CS ME-31VU24-TS12

Connection type	
V	Screw terminals
M	Connector with screw terminals
X	Connector with spring terminals

Release time in absence of power supply (t_R)	
TS12	Adjustable time, 1 … 12 s, 1 s steps

Features approved by UL

Rated supply voltage (U_n):	24 Vdc
Power consumption DC:	< 2 W

Electrical ratings:
- NO contacts: 230/240 Vac, 6 A general use, C300 pilot duty
- NC contacts: 230/240 Vac, 6 A resistive, B300 pilot duty

Notes:
- Use 60 or 75°C copper (Cu) conductor and wire size No. 30-12 AWG, stranded or solid.
- The terminal tightening torque of 5-7 lb in.
- Only for 24 Vac/dc versions: supply from remote Class 2 source or limited voltage limited energy.

- Utiliser des conducteurs en cuivre (Cu) 60 ou 75°C rigides ou flexibles de section 30-12 AWG.
- Couple de serrage des bornes de 5-7 Lb In.
- Seulement pour les versions 24 Vac/dc, alimenter avec sources de classes 2 ou avec tension limitée et énergie limitée.

CS ME-31 expansion module

Pin assignment

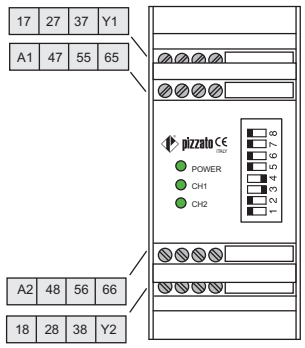

Function diagram

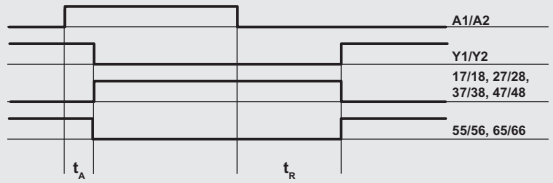

Legend:
t_A: response time
t_R: release time in absence of power supply (see "Code structure")

Internal wiring diagram

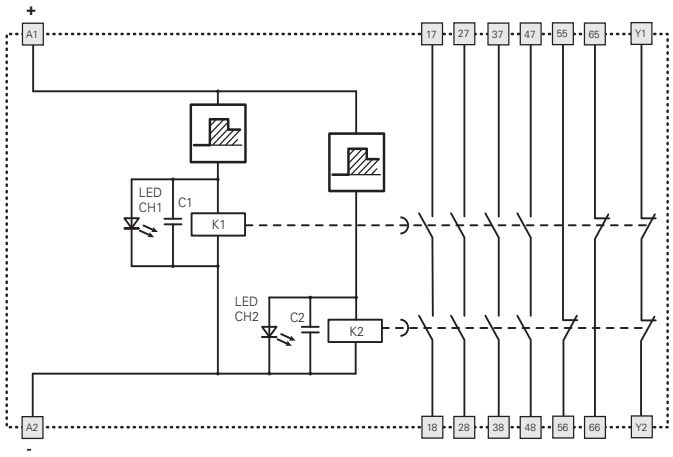

Release time selection t_R

DIP SWITCH	t_R (s)
ON / OFF	1
ON / OFF	2
ON / OFF	3
ON / OFF	4
ON / OFF	5
ON / OFF	6
ON / OFF	7
ON / OFF	8
ON / OFF	9
ON / OFF	10
ON / OFF	11
ON / OFF	12

Input configuration

Single channel control

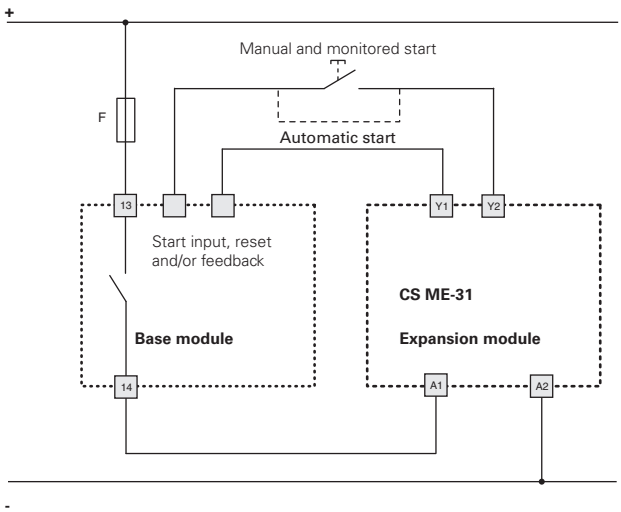

Double channel control

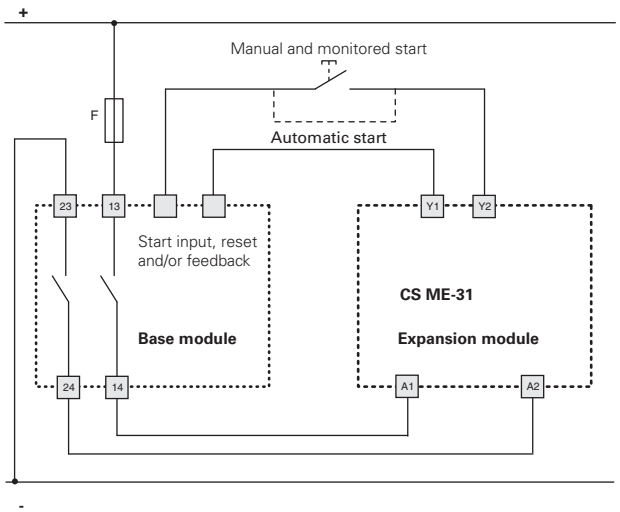

The diagram does not show the exact position of the terminals in the product

External contactors for increasing the number and the load capacity of the contacts

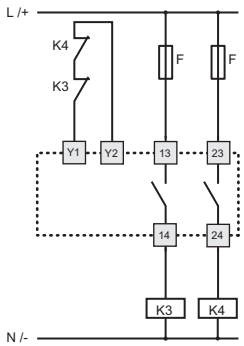

If necessary the number and the load capacity of output contacts can be increased by using expansion modules or contactors with forcibly guided contacts. For control of the external contactors, a NC contact of each relay is connected to the safety module feedback circuit between the start button terminals.

The following installation examples make use of the CS AR-08•••• module. For the use of other modules, see features, compatibility and internal wiring diagram of each single module.

Application examples: monitoring of movable guards, up to category 4 according to EN ISO 13849-1

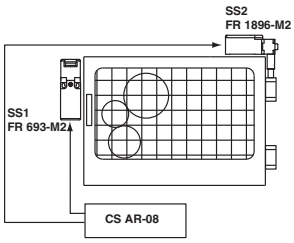

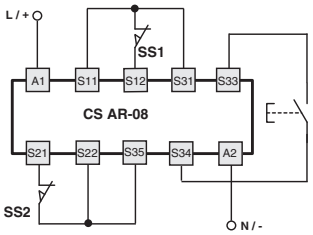

Compatible modules

CS AR-01••••	CS AR-02••••
CS AR-04••••	CS AR-05••••
CS AR-06••••	CS AR-07••••
CS AR-08••••	CS AT-0•••••
CS AT-1•••••	CS AT-3•••••
CS AR-91•024	

Monitoring of one movable guard through two switches with different technology. System in safety category 4.

Application examples: monitoring of safety magnetic sensors, up to category 4 according to EN ISO 13849-1

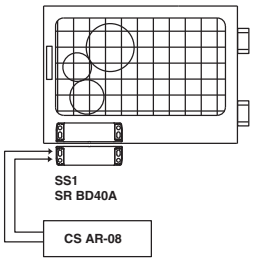

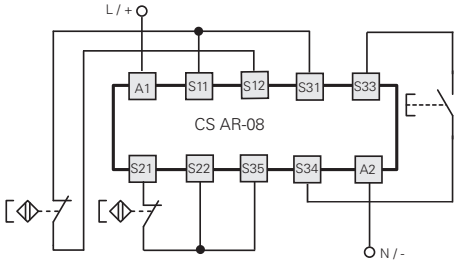

Compatible modules

CS AR-01••••	CS AR-02••••
CS AR-04•024	CS AR-05••••
CS AR-06••••	CS AR-08••••
CS AT-0•••••	CS AT-1•••••
CS AT-3•••••	CS AR-91•024

Monitoring of one movable guard through one coded magnetic sensor. System in safety category 4.

Application examples: light barrier monitoring, up to category 4 according to EN ISO 13849-1

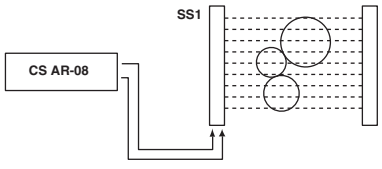

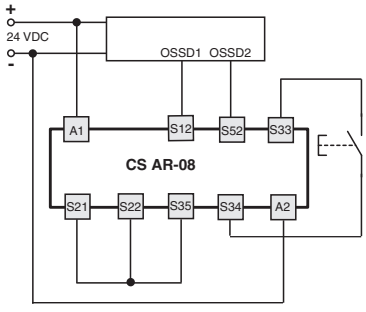

Compatible modules

CS AR-01••••	CS AR-05••••
CS AR-06••••	CS AR-08••••
CS AT-0•••••	CS AT-1•••••

Semiconductor outputs (e.g. light barriers) with two OSSD outputs. System in safety category 2 or 4 according to the barrier.

Application examples: monitoring of a switch and a button for emergency stop, up to cat. 3 according to EN ISO 13849-1

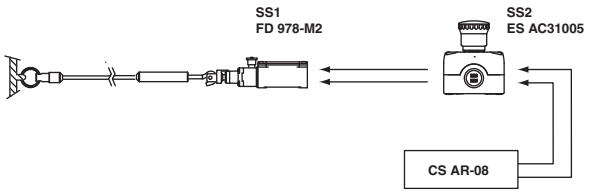

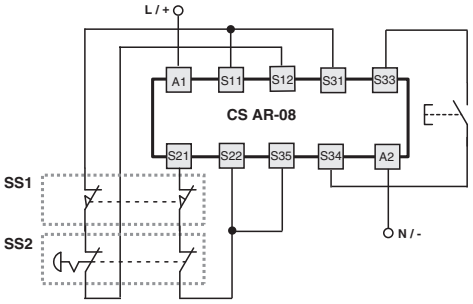

Compatible modules

CS AR-01••••	CS AR-02••••	CS AR-04••••	CS AR-05••••
CS AR-06••••	CS AR-07••••	CS AR-08••••	CS AR-20••••
CS AR-21••••	CS AR-22••••	CS AR-23••••	CS AR-24••••
CS AR-25••••	CS AT-0•••••	CS AT-1•••••	CS AT-3•••••
CS AR-91•024			

Application examples: monitoring of a series of switches and magnetic sensors, up to cat. 3 according to EN ISO 13849-1

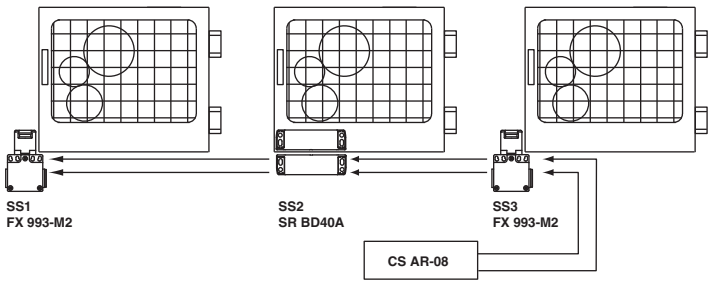

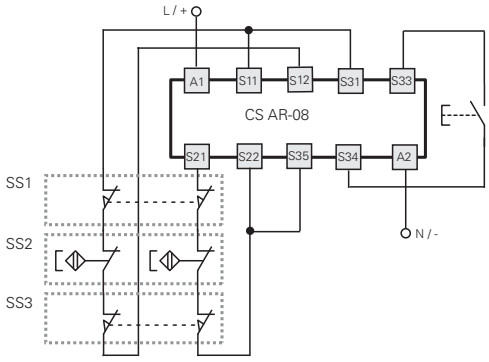

Compatible modules

CS AR-01••••	CS AR-02••••	CS AR-04•024	CS AR-05••••
CS AR-06••••	CS AR-08••••	CS AT-0•••••	CS AT-1•••••
CS AT-3•••••	CS AR-91•024		

Monitoring of several guards through switches and magnetic sensors. System in category 3. For the calculation of the diagnostic coverage, see ISO TR24119.

- The use of just one switch per guard requires that it be possible to exclude the possibility of mechanical breakage of the switch during the risk assessment.
- The sensor must have two channels and be coded.
- If available, verify the provisions of the Type C standard for your own machine.

Application examples: possibility of parallel module reset, up to category 4 according to EN ISO 13849-1

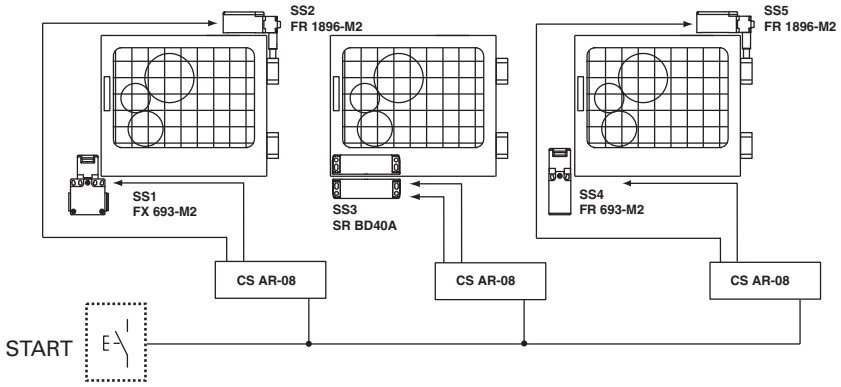

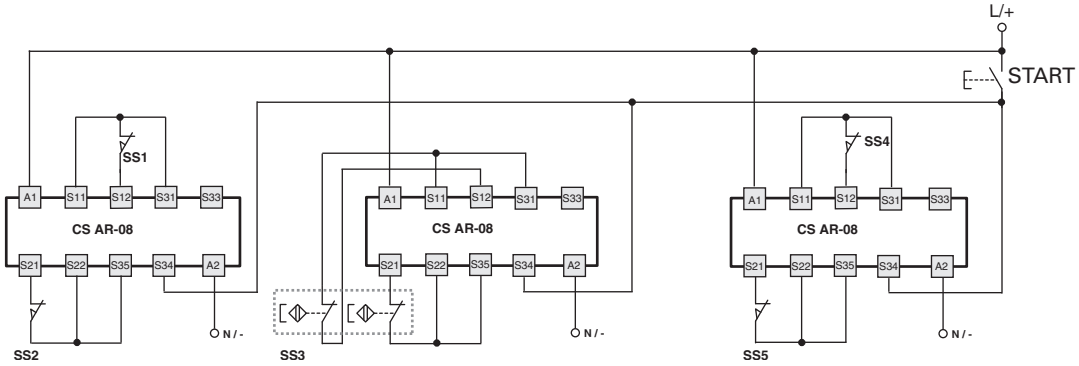

Monitoring of several guards through different technologies. System in safety category 4. The example shows the possibility of a contemporaneous reset of several modules via a single contact of a button.

Compatible modules

CS AR-04•024	CS AR-05•024	CS AR-06•024
CS AR-08•024	CS AR-91•024	

Movable guard monitoring in category 4 up to PL e acc. to EN ISO 13849-1
Guard interlock in category 4 up to PL e acc. to EN ISO 13849-1

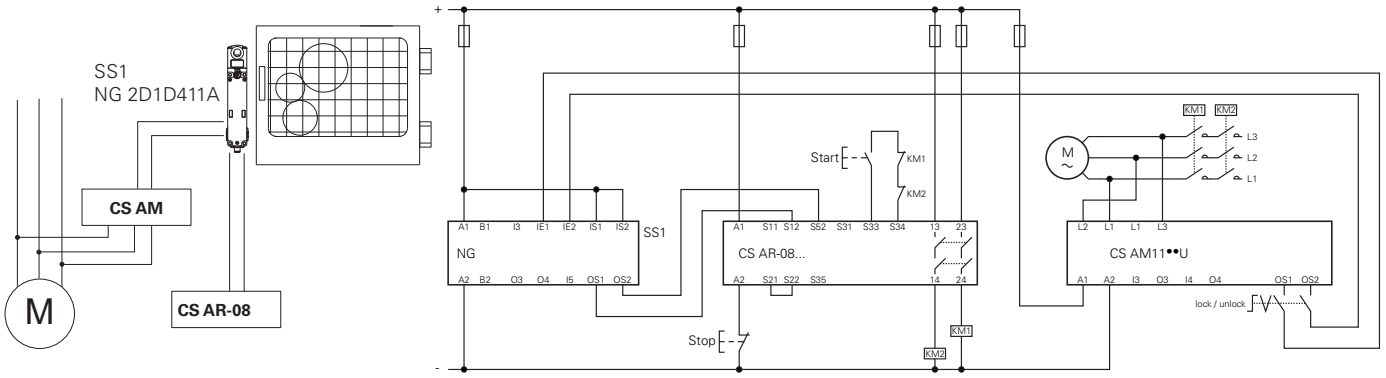

Guard monitoring and interlock by means of interlocking device with RFID technology in category 4, PL e and SIL3.
Release command enabled by the safety module for standstill monitoring.

Movable guard monitoring in category 4 up to PL e acc. to EN ISO 13849-1
Guard interlock in category 2 up to PL d acc. to EN ISO 13849-1

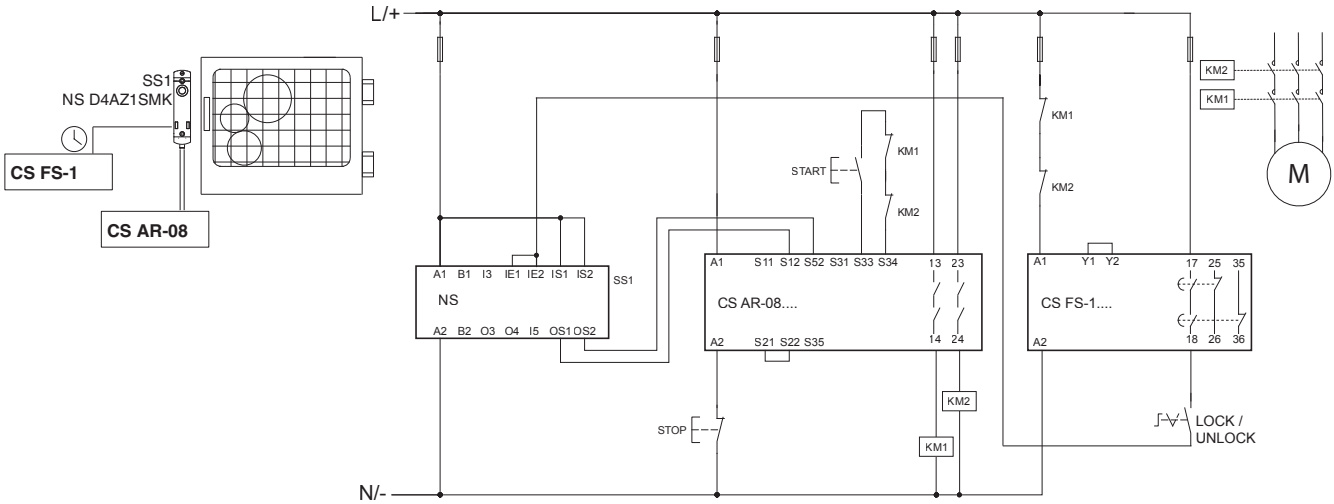

Guard monitoring and interlock by means of interlocking device with RFID technology in category 4, PL e and SIL3.
Release command enabled by the safety timer.

Connection of two expansion modules to the PNP safety outputs of a programmable module of the GEMNIS series

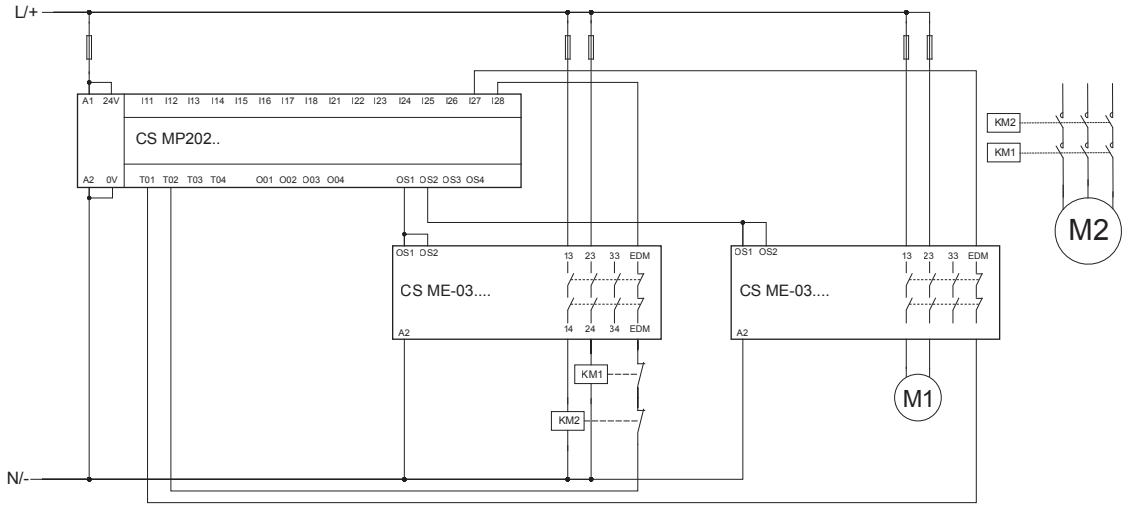

The circuit diagram only shows the connection of the expansion modules; the connection of inputs and other outputs was intentionally omitted.
Note: Motor M1 with load according to the utilisation categories of the contacts of the CS ME-03 module.
Note: The connection between OS1 of module CS MP202 and inputs OS1 and OS2 of module CS ME-03 can be regarded as fault-excluded since both are located in the same switching cabinet. See table D.4, item D.2.4 of EN ISO 13849-2.

Note: The NC contacts of KM1 and KM2 are mechanically guided (EN 60947-4-1, Annex F)

Monitoring of guards by means of sensors with RFID technology in series connection

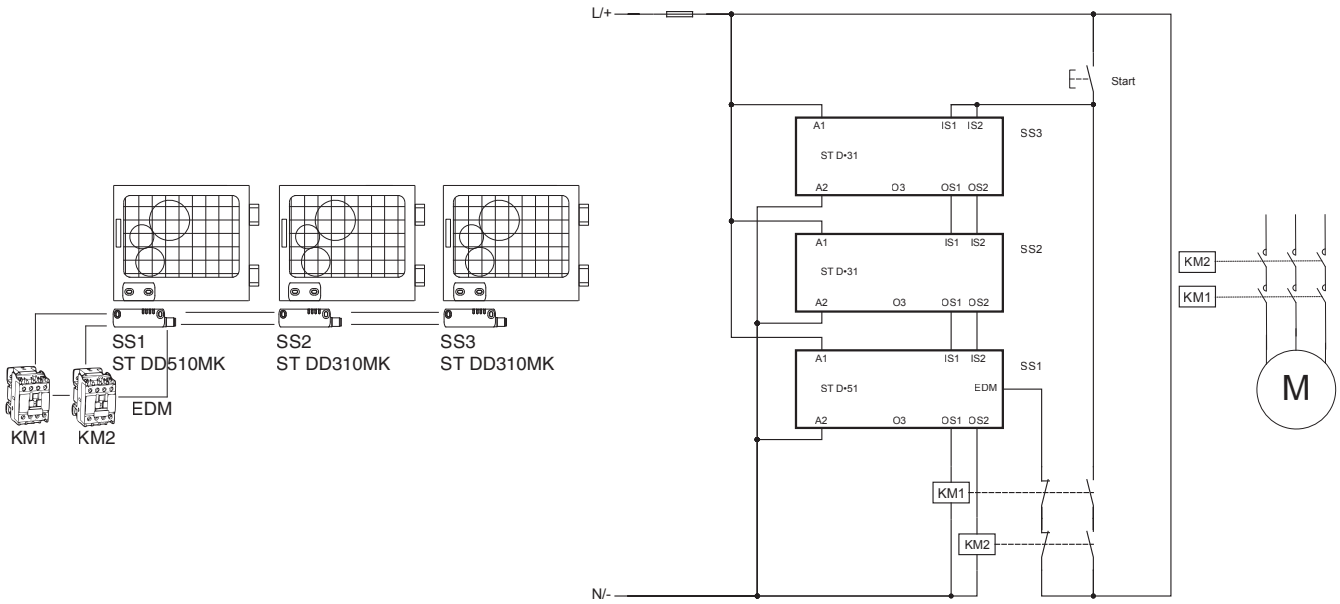

Direct monitoring of the status of the contactors via the EDM input of the last sensor in the series connection

Category IIIC two-hand control acc. to EN ISO 13851

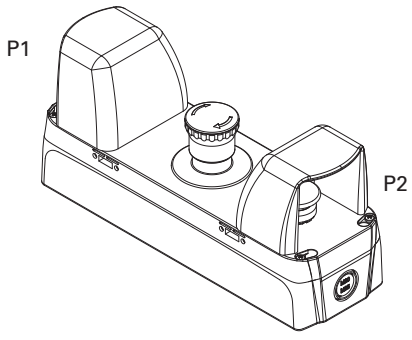

EA AC37041

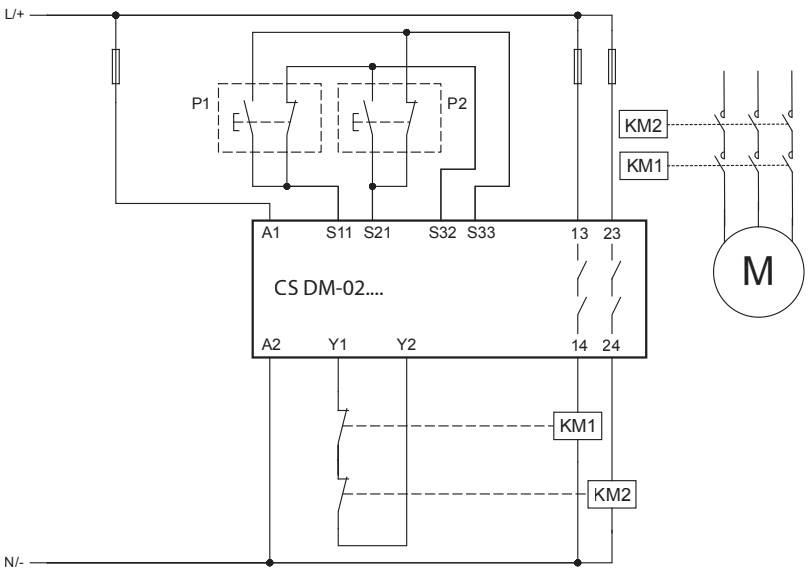

CS MP programmable multifunction safety modules

Introduction

GEMNIS

A **Gemnis** series module is a programmable safety device, which allows several safety functions to be carried out simultaneously. This product series has been developed specifically to meet the needs of machinery manufacturers for machines with a low to average number of safety functions. As an indication, these modules can manage small applications which are equivalent to the functions carried out by 3 to 4 traditional electromechanical safety modules, up to circuits with dozens of inputs.

Gemnis series safety modules can implement safety circuits with a safety category of up to "Maximum SIL 3" acc. to EN 62061, PL e and category 4 acc. to EN ISO 13849-1.

The **Gemnis** series of safety modules has been updated to **version 12** which introduces new functions and improved hardware- and software-level performance. This update considerably increases the application potential of these products.

The **Gemnis Studio** program is a graphic development environment for the creation, simulation and debugging of programs that are uploaded to the corresponding modules of the Gemnis family.

This software is licensed to users wishing to program these modules, subject to prior registration at **www.gemnis.com**.

You can download the latest **Gemnis Studio** software version (**Gemnis Studio 12**) from the site, which will allow you to program both current, **Gemnis K12**-designated modules, as well as previous ones.

General features of safety modules

Gemnis series modules can manage all of the following safety device types:

- Mechanical safety switches
- Switches with solenoid for guard interlock
- Magnetic safety sensors
- Safety light barriers or optical safety sensors (category 4)
- Safety sensors
- Mushroom buttons for emergency stop
- Rope switches for emergency stop
- Safety mats or safety bumpers with 4-wire technology
- Category IIIA or IIIC two-hand controls
- Safety selector switches
- Enabling devices
- 4-20 mA analogue sensors
- 0-4 kHz frequency signals
- Dual-beam muting systems

This modules are also equipped with functionality allowing you to also implement:

- Safety timers;
- Detection of various types of faults in safety devices or their connections;
- Monitoring of the module's internal temperature limit values;
- Status communication via USB port or the SERIAL function block.

Finally, Gemnis series modules can:

- Manage up to eight different electronic safety outputs or four relay outputs;
- Manage various signalling outputs (not safety-related);
- Status information and data settings via the USB communication port.

Gemnis design safety modules can implement safety circuits with up to "Maximum SIL 3" acc. to EN ISO 62061, PL e and category 4 acc. to EN ISO 13849-1.

Website

This product line is supported online via the **www.gemnis.com** website, where you can:

- download the Gemnis Studio installation package (following registration);
- download support files;
- get the most up to date version of the instruction manual;
- get examples and other support information which will be added over time;
- watch videos illustrating Gemnis Studio program operation.

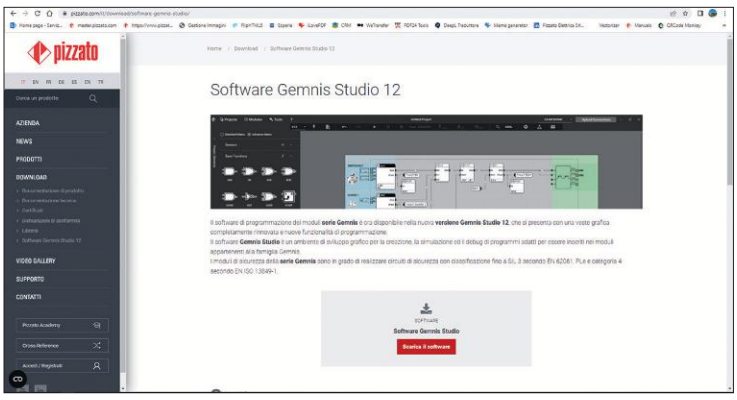

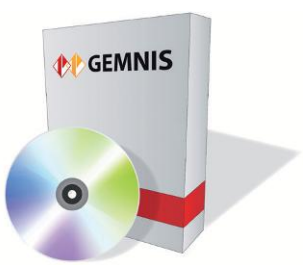

Hardware structure of the modules

Gemnis design modules are created with increased flexibility - even at the hardware level. These products are made up of various electronic circuit boards which are sold in various combinations, but which are always contained in a single housing and with one unique product code.

The Gemnis series modules have a general redundant and self monitoring type structure, they are controlled by a pair of processors which simultaneously run the application program and constantly monitor their operation and system integrity in parallel.

Each module is supplied in a single housing, of the minimum width required to house the boards which make up the module. 45 mm to 90 mm wide housings are available. The customer does not need to worry therefore about wiring the various parts.

The USB port integrated within the module is used for programming and debugging of the Gemnis Studio software module. Once a module is programmed, you can also use the USB port for communicating with a PC installed on the machine, and for the exchange of information relating to the module state.

The main hardware innovations introduced to version 12 by the safety module update are the following:

- ability to manage programs up to 4 times larger;
- new module configurations available (see following table).

Module	Inputs type I	Inputs type J	Inputs type C	Inputs type F	Test signals T	OS safety outputs	O signalling outputs	Port	Width (mm)	Page
CS MP201M0	8	-	-	-	8	3NO	4	USB	45	95
CS MP202M0	16	-	-	-	4	4 PNP	4	USB	45	96
CS MP203M0	12	-	-	-	4	3NO + 1NO	4	USB	45	97
CS MP204M0	12	-	-	-	4	3NO	4	USB	45	98
CS MP205M0	4	4	-	4	4	4 PNP	4	USB	45	99
CS MP206M0	8	-	-	-	4	4 PNP	12	USB	45	100
CS MP207M0	4	-	2	-	4	4 PNP	4	USB	45	101
CS MP208M0	16	-	-	-	4	8 PNP	-	USB	45	102
CS MP301M0	24	-	-	-	8	3NO	4	USB	67,5	103
CS MP302M0	24	-	-	-	12	4 PNP	4	USB	67,5	104
CS MP303M0	32	-	-	-	4	4 PNP	4	USB	67,5	105
CS MP304M0	28	-	-	-	4	3NO + 1NO	4	USB	67,5	106
CS MP305M0	24	-	-	-	4	4 PNP	12	USB	67,5	107
CS MP306M0	20	-	-	-	4	3NO + 1NO	12	USB	67,5	108
CS MP307M0	8	4	2	4	4	4 PNP	4	USB	67,5	109
CS MP308M0	24	-	-	-	4	8 PNP	8	USB	67,5	110
CS MP309M0	32	-	-	-	4	8 PNP	-	USB	67,5	111
CS MP310M0	8	8	-	8	4	4 PNP	4	USB	67,5	112
CS MP311M0	20	-	2	-	4	4 PNP	4	USB	67,5	113
CS MP312M0	16	4	-	4	8	8 PNP	-	USB	67,5	114
CS MP401M0	40	-	-	-	4	4 PNP	12	USB	90	115
CS MP402M0	32	-	-	-	12	8 PNP	8	USB	90	116
CS MP403M0	40	-	-	-	4	8 PNP	8	USB	90	117
CS MP406M0	32	-	-	-	4	4 PNP	20	USB	90	118

I = Digital inputs
J = Digital inputs, decoupled
C = Inputs for 4-20 mA analogue signals
F = Inputs for 0 … 4 kHz frequency signals

T = Test signals
OS = OSSD safety outputs (PNP)
nn = Relay safety outputs
O = signalling outputs (PNP)

Software Gemnis Studio

Gemnis Studio is software designed to allow users to program modules belonging to the Gemnis family. This software has a graphical interface to visually display, in a natural and intuitive way, the assembly of operations that the application program will execute, once loaded to the module. Gemnis Studio allows you to attach supporting information and useful notes to the configuration information, for overall understanding of the program. Gemnis Studio also allows you to check correct application program operation prior to sending it to the module via the simulation.

Finally, Gemnis Studio allows you to carry out monitoring and detection operations, and to graphically represent the state of an active operational device in real time.

New release 12 available

In the latest version Gemnis Studio 12 the following new features have been introduced:

- Completely updated graphical user interface with collapsible side panels that contain sensors and function blocks as well as the possibility to switch between a light or dark display scheme;
- New remote support management;
- New function blocks for performing mathematical functions that are very useful for applications with frequency inputs for speed control or with current inputs for analogue sensors;
- Option of disabling the test pulses of the PNP safety outputs.

Desktop

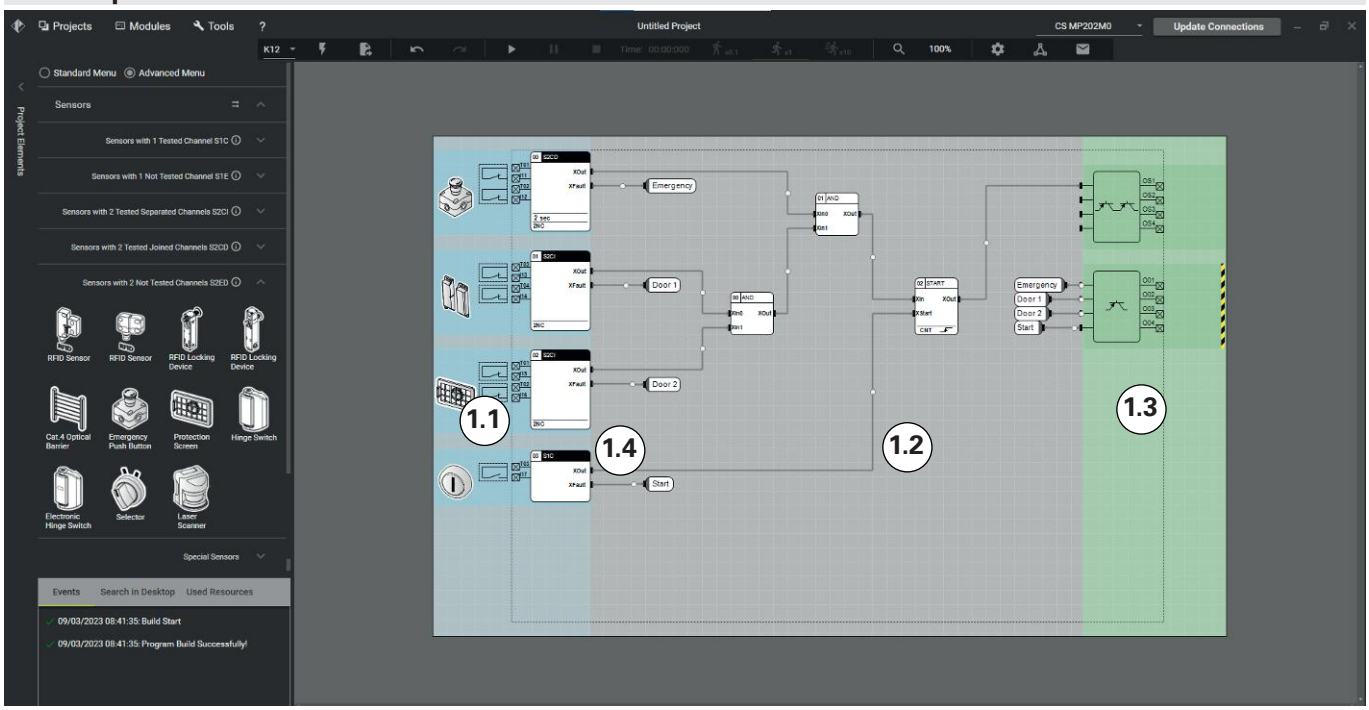

The Gemnis Studio software has been designed with the objective of making Gemnis series module operation as immediate and visual as possible. With this aim, we decided to create a work environment – the Desktop – where, as far as possible, the user can amass all the information required to actually "view" and not just "imagine" the behaviour of the project under development. This is the reason we have made room for graphical object representations, of the physical characteristics of the module in use, and immediate interaction, by means of simulation, with the created program.

The desktop is the main user work area, the zone where the flow and processing to be applied to the data detected by the module are defined using the graphical program interface.

The desktop is divided into three parts:

1.1) the sensor zone
1.2) the functional block zone
1.3) the output zone

In the sensor zone (1.1) the user indicates the external device types connected to the module terminals, and all the parameters needed to define them.

In the output zone (1.3) all the output devices present in the selected module (relays, transistors etc.) are immediately shown.

In the function block zone (1.2) the user will enter all the logical functions needed to process the flow of data coming from the sensors, and will proceed to make the connections to transfer this data between the objects in the desktop and finally to the outputs.

The desktop includes a dotted box (1.4) which represents the area "occupied by the module", or, everything enclosed within the physical module, from terminals to code. The area outside this box, meanwhile, is occupied by images of the physical devices external to the module (switches, buttons, etc.), illustrating their expected internal structure and any description.

At the user's request, the desktop content is compiled and, provided there are no errors, it is translated into the application program. If a module is connected to the computer, you can immediately transfer the application program to it, and thereby check its effective operation in the field.

Otherwise it is possible to simulate application program operation directly on the desktop, by interacting with the sensors and evaluating their effects graphically.

Project

The collection of information required to configure a module and describe its activities is called a "Project". Using Gemnis Studio, the user can assemble the textual and graphical information required to elaborate and comment the functions which will be carried out by the program, once installed on a Gemnis line module.

Printing

Gemnis Studio can generate a Connection Report, which includes all connections to the module terminals, and a user Program Report, allowing you to print the Application Program.

Password

The password gives the option of protecting a module's interaction capacity, and the ability to modify the project file.

Sensors

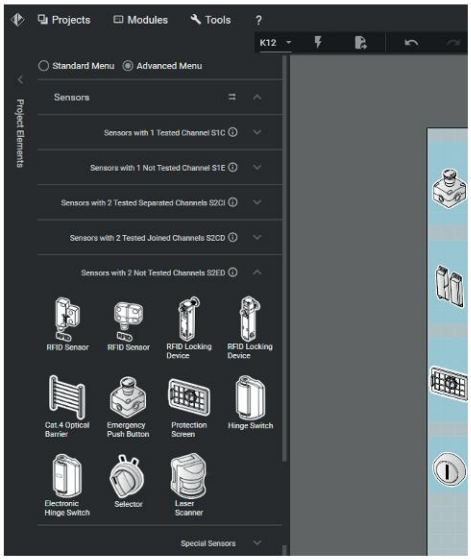

The sensor zone indicates the external device types which can be connected to the module terminals, and all the parameters needed to define them.

Each sensor created displays a view of the internal contact configuration and of how the contacts are connected to the module terminals, a box with the associated safety function, and the parameters selected for the function.

From the sensor panel, you can select a sensor using the mouse and drag it into the dedicated desktop area.

A full list of the available sensors is shown on the side.

Sensor list

Sensor type	Diagram	Examples
Sensor with 1 not testable channel		
Sensor with 2 not testable channels, with interdependent signals		
Sensor with 1 tested channel		
Sensor with 2 independent tested channels		
Sensor with 2 dependent tested channels		
Sensor with 2 always-closed tested channels, short circuit permitted between the channels		
Sensor with 2 tested channels which can be crossed		
Sensor with 2 tested channels which cannot be crossed		
Sensor with 2 to 8 tested channels which cannot be crossed and which may only be active one at a time		
Sensor with 2 tested channels which cannot be crossed and which must follow a very precise activation/deactivation sequence made up of three states: rest, work, stop		
Dual temperature sensor integrated in module		
Monitoring of a pair of analogue sensors with 4-20 mA output in both 2-wire and 3-wire versions		
Monitoring of a pair of signals with frequencies up to 4 KHz		

Function blocks

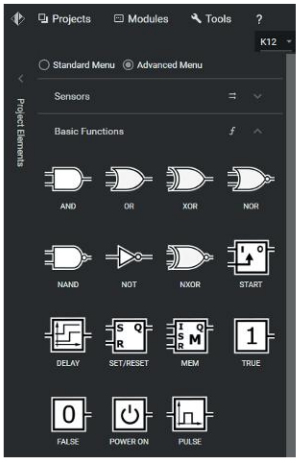

The function blocks represent all the logic functions required to process the data flow between sensors and outputs.

From the function block panel, a block can be selected using the mouse and dragged into the dedicated desktop area.

A full list of the available function blocks is shown on the side.

List of available function blocks

- **AND** — Basic Boolean function
- **OR** — Basic Boolean function
- **XOR** — Basic Boolean function
- **NOR** — Basic Boolean function
- **NAND** — Basic Boolean function
- **NOT** — Basic Boolean function
- **NXOR** — Basic Boolean function
- **START** — Control function
- **MEM** — Generic memory function
- **DELAY** — Returns a signal of type Delay Off or Delay On
- **SET/RESET** — Basic logical memory function
- **POWER ON** — Active signal at first execution cycle
- **PULSE** — Returns a signal of type Delay Off on the preselected input edge
- **CLOCK** — Generates pulses at pre-established fixed intervals
- **ERROR** — Puts the module into Error State
- **LKTBL** — Conversion table between data of the same type
- **GEQ/EQU/LEQ** — Carries out a numerical comparison between two values of type B or W and displays the result in Boolean format (X)
- **MESSAGE** — Transmits a message on the USB and COM ports
- **COUNTER** — Pulse counter
- **COUNTER** — Pulse counter
- **TRIGGER** — Detects the edge, either rising or falling, of an input signal
- **FILTER** — Filters a signal from interference for a duration lower than set time
- **LDC** — Upstream function block for monitoring of a door-locking system
- **WAVE** — Generates a waveform with variable period and ON time
- **MUTE2** — Upstream function block for monitoring of a 2-beam muting system
- **WTOB** — Converts data from W format to B format
- **TRUE / FALSE** — Basic Boolean function
- **MUL** — Mathematical multiplication function
- **EDM** — External device monitoring
- **SERIAL** — Dialogue between safety module and external PLC to monitor the state of sensors, logic blocks or general inputs connected to the module
- **SUM** — Calculates the mathematic addition between two values
- **ADIFF** — Calculates the mathematic absolute difference between two values
- **AVG** — Calculates the mathematic average between two values
- **BTST** — Sends the value of the bit in the position predetermined by the input data to the XOut output bit

CS MP programmable multifunction safety modules

Simulation

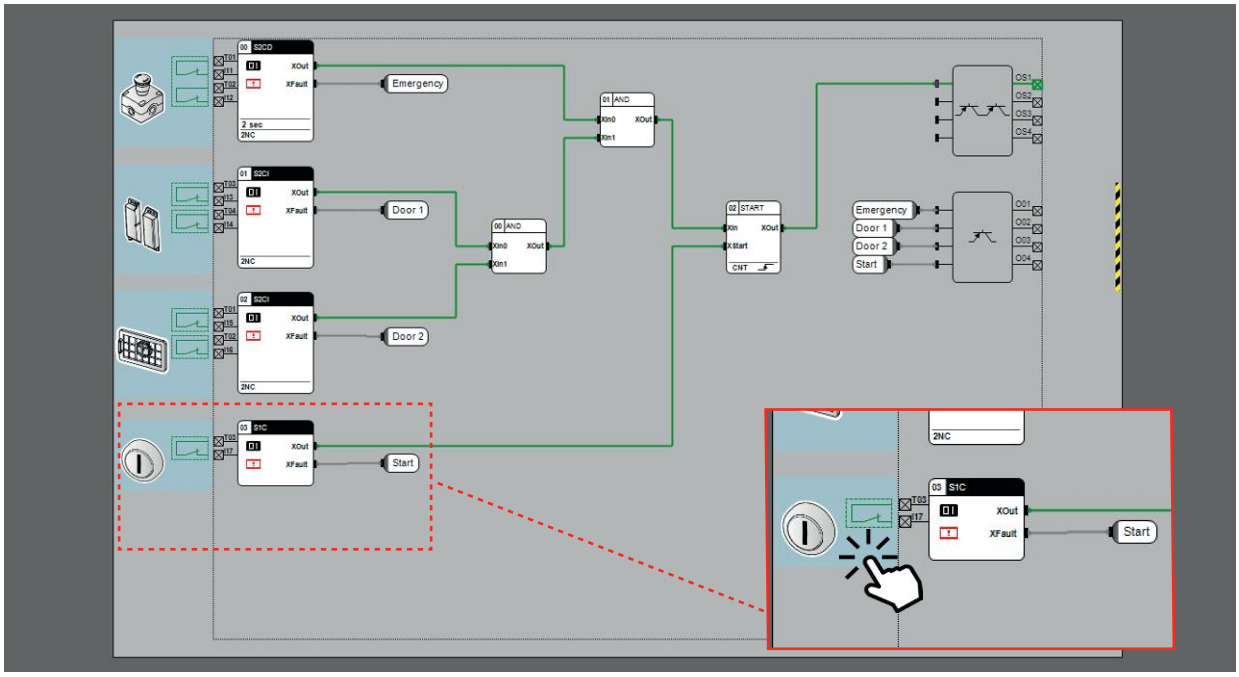

Gemnis Studio is equipped with a useful simulation environment, which allows you to carry out tests on your application program under development and check its correct operation before you install it in a module. To run an application program simulation during the development phase, simply press the Start button on the toolbar at the top of the desktop. If the application program cannot be compiled, the simulation will not run.

Upon start of the simulation phase, the desktop and the way you interact with it change. During this phase you can simulate module operation by interacting with the sensors and simulating real world conditions or operations. Clicking on the sensors will make them execute, in sequence, the standard events for each sensor. Each of these interactions modifies the state of the sensor output variables which, via the connectors, will become the input variables of the function blocks, which will evaluate them and so on, until the data arrives at the outputs that will or will not activate. This simulates exactly what will happen in the module.

Transmission of the information via the connectors is visible via colour change of the connectors.

Monitor

You can monitor operation of one or more Gemnis modules in real time using the Monitor function.

You can observe the overall operation state of the module and various data relating to the program being executed, including a list of most recently saved programs. The execution status of the program as well as the status of the module inputs and outputs can be viewed in real time. In Gemnis Studio 12 the video data update has been made faster and graphical pan & zoom functions are also available for the analysis of large projects.

SERIAL function block

With the SERIAL function block it is therefore possible to export "bit" type information from a Gemnis safety module (typically the open or closed state of the guard, but also the locked or unlocked state of the guard, or results of logical combinations between other GEMNIS STUDIO function blocks) using a maximum of 2 cables and 2 module outputs.

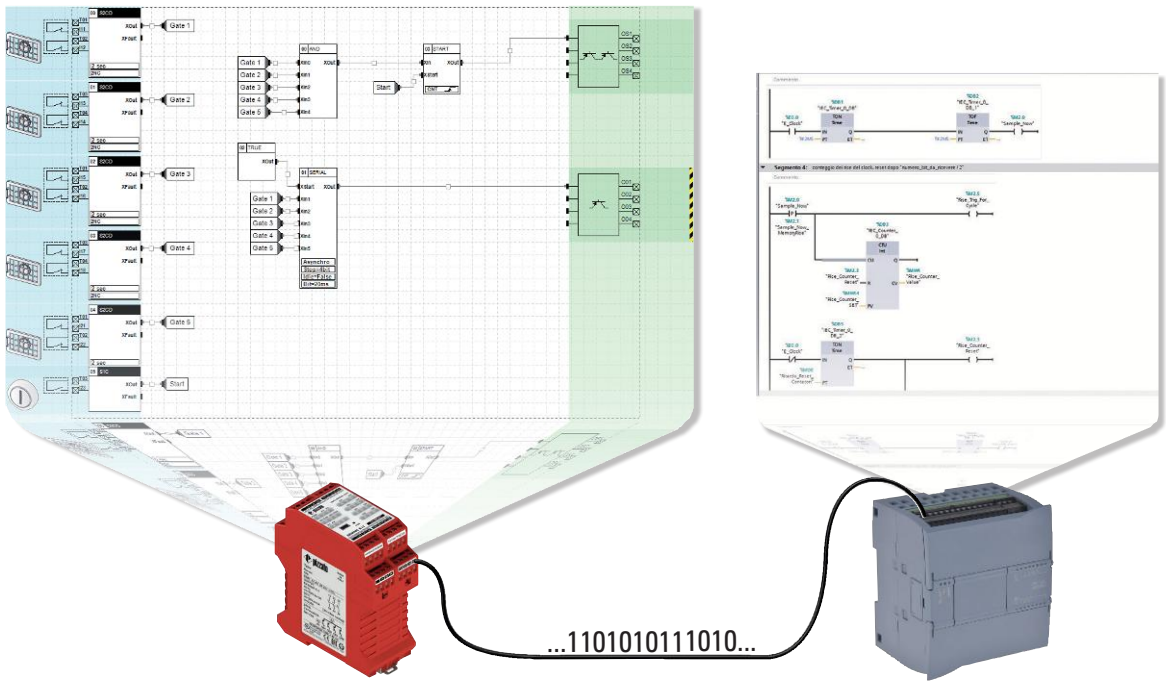

Transmission parameters

The function block allows a wide range of transmission parameters to be set:

- number of bits to be transmitted (2 to 32): any digital signal, including function block-outputs;
- 2 types of transmission: synchronous (uses two outputs: signal and clock) or asynchronous (one self-synchronizing output, bit with Manchester coding);
- adjustable bit duration from 10 to 500 ms;
- IDLE status of the output cable (0, 1);
- number of fill bits between two consecutive transmissions (2 to 10);
- max. transmission speed: 100 bit/s in synchronous transmission, 50 bit/s in asynchronous transmission.

Advantages for the user

- The new SERIAL function block can be **used on all Gemnis modules**, even on previously purchased ones;
- **No hardware upgrade costs**;
- Simply download the latest **release of Gemnis Studio 12.5.1.0**;
- Less outputs occupied in the module: 1 single output for transmitting up to 32 bits;
- Less wiring: only 1 or 2 wires required;
- No need for a PC with USB connection to the safety module;
- The pulse sequence can be decoded with any type of PLC.

Technical support

Pizzato Elettrica provides technical support free of charge to users who have registered on the website and downloaded Gemnis Studio.
The information requested must be relevant to the functionality of the module. We do not provide a consulting service based on the customer's application.

Online support

The site www.gemnis.com contains video tutorials illustrating Gemnis Studio program operation.

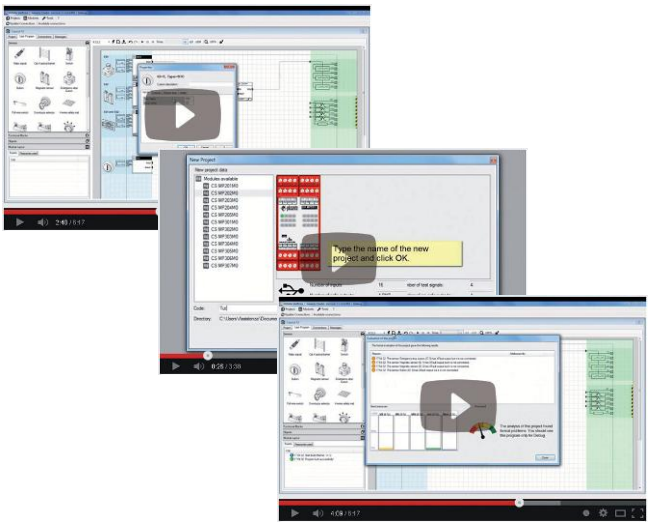

CS MP201M0 programmable multifunction safety module

Main features

- For safety applications up to SIL 3/PL e
- Supply voltage: 24 Vdc
- Gemnis Studio for easy and intuitive programming and program simulation
- Large selection of logical blocks for the management of external devices and programs
- Custom configured versions available on request

Quality marks:

EC type examination certificate: M6A 075157 0032
UL approval: E131787
CCC approval: 2024010305656748
TÜV SÜD approval: Z10 075157 0031
EAC approval: RU Д-IT.PA07.B.37848/24

General data

Parameter:	Value:	Page:
"Maximum SIL" secondo EN IEC 62061	up to "Maximum SIL 3"	
Performance Level (PL) acc. to EN ISO 13849-1	up to PL e	
Safety category acc. to EN ISO 13849-1	up to cat. 4	
$MTTF_D$	135 years	
PFH_D	1.44E-09 h^{-1}	
Mission time	20 years	
System response time	< 40 ms	
Dimensions (HxLxW)	111.5x45x99 mm	
Housing data		119 1)
Environmental data		119 2)
Power supply		119 3)
In compliance with standards		119 4)
Programming software	Gemnis Studio	119 5)
USB port	Yes	
Safety inputs (Ix)	8	119 6)
Test outputs (Tx)	8	120 10)
Semiconductor signalling output circuits (Ox)	4	120 11)
Safety relay circuits	3NO	120 14)

Pin assignment

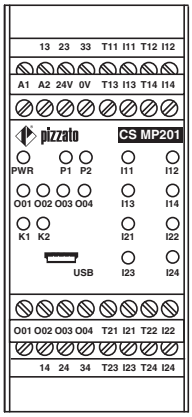

Internal wiring diagram

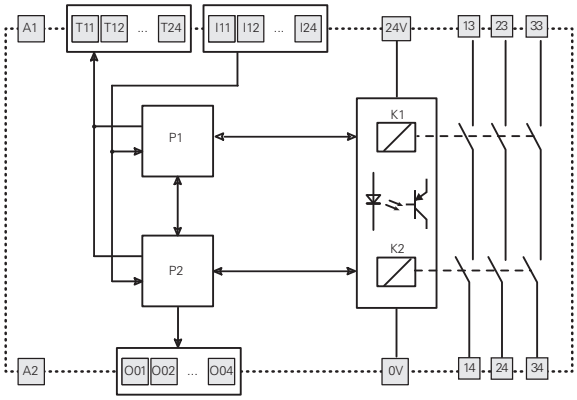

Code structure

CS MP201M0

Connection type	
M	Connector with screw terminals
X	Connector with spring terminals

CS MP202M0 programmable multifunction safety module

Main features

- For safety applications up to SIL 3/PL e
- Supply voltage: 24 Vdc
- Gemnis Studio for easy and intuitive programming and program simulation
- Large selection of logical blocks for the management of external devices and programs
- Custom configured versions available on request

Quality marks:

EC type examination certificate: M6A 075157 0032
UL approval: E131787
CCC approval: 2024010305656748
TÜV SÜD approval: Z10 075157 0031
EAC approval: RU Д-IT.PA07.B.37848/24

General data

Parameter:	Value:	Page:
"Maximum SIL" secondo EN IEC 62061	up to "Maximum SIL 3"	
Performance Level (PL) acc. to EN ISO 13849-1	up to PL e	
Safety category acc. to EN ISO 13849-1	up to cat. 4	
$MTTF_D$	614 years	
PFH_D	1.32E-09 h^{-1}	
Mission time	20 years	
System response time	< 30 ms	
Dimensions (HxLxW)	111.5x45x99 mm	
Housing data		119 1)
Environmental data		119 2)
Power supply		119 3)
In compliance with standards		119 4)
Programming software	Gemnis Studio	119 5)
USB port	Yes	
Safety inputs (Ix)	16	119 6)
Test outputs (Tx)	4	120 10)
Semiconductor signalling output circuits (Ox)	4	120 11)
Semiconductor safety output circuits (OSx)	4 PNP	120 12)

Pin assignment

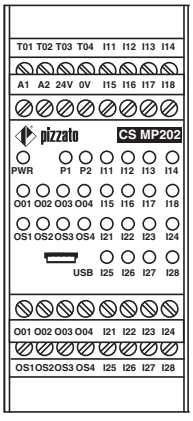

Internal wiring diagram

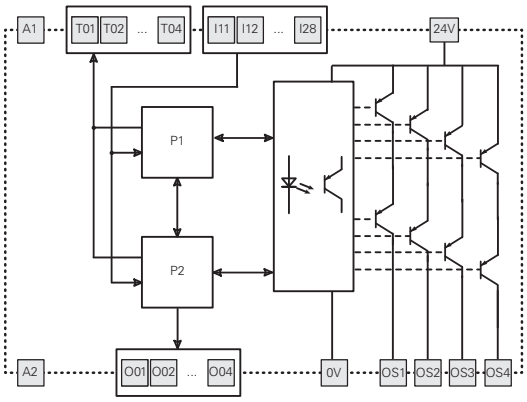

Code structure

CS MP202M0

Connection type	
M	Connector with screw terminals
X	Connector with spring terminals

CS MP203M0 programmable multifunction safety module

Main features

- For safety applications up to SIL 3/PL e
- Supply voltage: 24 Vdc
- Gemnis Studio for easy and intuitive programming and program simulation
- Large selection of logical blocks for the management of external devices and programs
- Custom configured versions available on request

Quality marks:

EC type examination certificate: M6A 075157 0032
UL approval: E131787
CCC approval: 2024010305656748
TÜV SÜD approval: Z10 075157 0031
EAC approval: RU Д-IT.PA07.B.37848/24

General data

Parameter:	Value:	Page:
"Maximum SIL" secondo EN IEC 62061	up to "Maximum SIL 3"	
Performance Level (PL) acc. to EN ISO 13849-1	up to PL e	
Safety category acc. to EN ISO 13849-1	up to cat. 4	
$MTTF_D$	103 years	
PFH_D	1.61E-09 h^{-1}	
Mission time	20 years	
System response time	< 40 ms	
Dimensions (HxLxW)	111.5x45x99 mm	
Housing data		119 1)
Environmental data		119 2)
Power supply		119 3)
In compliance with standards		119 4)
Programming software	Gemnis Studio	119 5)
USB port	Yes	
Safety inputs (Ix)	12	119 6)
Test outputs (Tx)	4	120 10)
Semiconductor signalling output circuits (Ox)	4	120 11)
Safety relay circuits	3NO+1NO	120 14)

Pin assignment

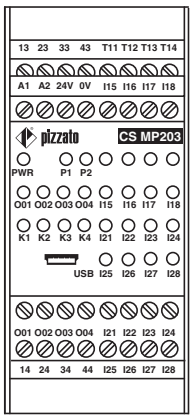

Internal wiring diagram

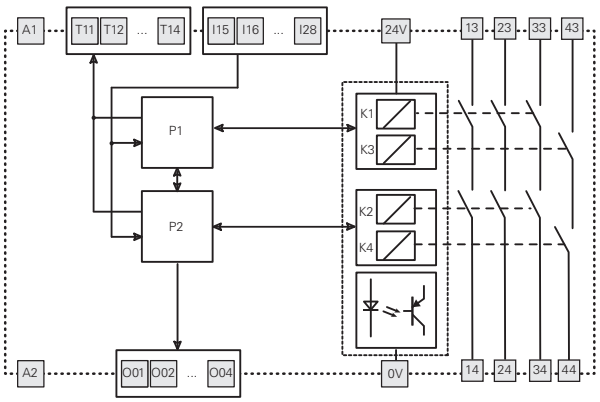

Code structure

CS MP203M0

Connection type	
M	Connector with screw terminals
X	Connector with spring terminals

CS MP204M0 programmable multifunction safety module

Main features

- For safety applications up to SIL 3/PL e
- Supply voltage: 24 Vdc
- Gemnis Studio for easy and intuitive programming and program simulation
- Large selection of logical blocks for the management of external devices and programs
- Custom configured versions available on request

Quality marks:

EC type examination certificate: M6A 075157 0032
UL approval: E131787
CCC approval: 2024010305656748
TÜV SÜD approval: Z10 075157 0031
EAC approval: RU Д-IT.PA07.B.37848/24

General data

Parameter:	Value:	Page:
"Maximum SIL" secondo EN IEC 62061	up to "Maximum SIL 3"	
Performance Level (PL) acc. to EN ISO 13849-1	up to PL e	
Safety category acc. to EN ISO 13849-1	up to cat. 4	
$MTTF_D$	134 years	
PFH_D	1.52E-09 h^{-1}	
Mission time	20 years	
System response time	< 40 ms	
Dimensions (HxLxW)	111.5x45x99 mm	
Housing data		119 1)
Environmental data		119 2)
Power supply		119 3)
In compliance with standards		119 4)
Programming software	Gemnis Studio	119 5)
USB port	Yes	
Safety inputs (Ix)	12	119 6)
Test outputs (Tx)	4	120 10)
Semiconductor signalling output circuits (Ox)	4	120 11)
Safety relay circuits	3NO	120 14)

Pin assignment

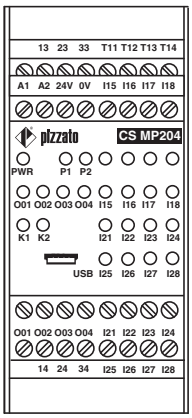

Internal wiring diagram

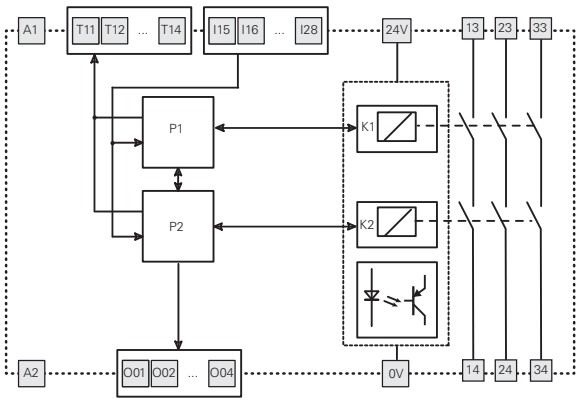

Code structure

CS MP204M0

Connection type	
M	Connector with screw terminals
X	Connector with spring terminals

CS MP205M0 programmable multifunction safety module

Main features

- For safety applications up to SIL 3/PL e
- Supply voltage: 24 Vdc
- Gemnis Studio for easy and intuitive programming and program simulation
- Large selection of logical blocks for the management of external devices and programs
- Custom configured versions available on request

Quality marks:

EC type examination certificate: M6A 075157 0032
UL approval: E131787
CCC approval: 2024010305656748
TÜV SÜD approval: Z10 075157 0031
EAC approval: RU Д-IT.PA07.B.37848/24

General data

Parameter:	Value:	Page:
"Maximum SIL" secondo EN IEC 62061	up to "Maximum SIL 3"	
Performance Level (PL) acc. to EN ISO 13849-1	up to PL e	
Safety category acc. to EN ISO 13849-1	up to cat. 4	
$MTTF_D$	373 years	
PFH_D	2.19E-09 h^{-1}	
Mission time	20 years	
System response time	< 30 ms	
Dimensions (HxLxW)	111.5x45x99 mm	
Housing data		119 1)
Environmental data		119 2)
Power supply		119 3)
In compliance with standards		119 4)
Programming software	Gemnis Studio	119 5)
USB port	Yes	
Safety inputs (Ix)	4	119 6)
Decoupled digital inputs (Jx)	4	119 7)
Inputs for frequency signals from 0 to 4 kHz (Fx)	4	120 9)
Test outputs (Tx)	4	120 10)
Semiconductor signalling output circuits (Ox)	4	120 11)
Semiconductor safety output circuits (OSx)	4 PNP	120 12)

Pin assignment

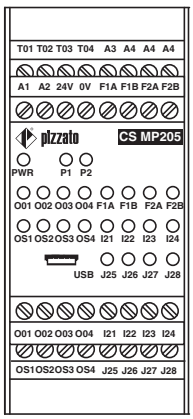

Internal wiring diagram

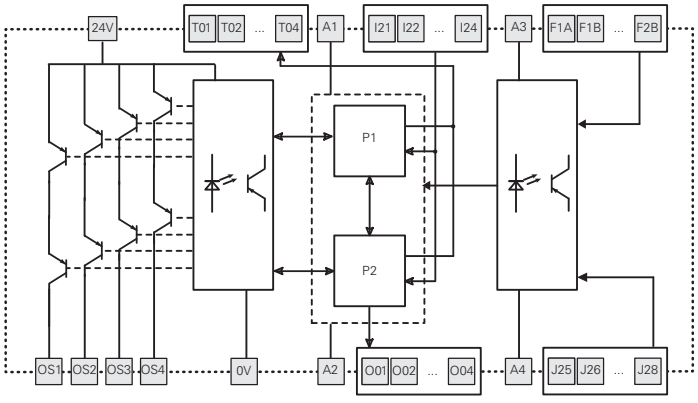

Code structure

CS MP205M0

Connection type	
M	Connector with screw terminals
X	Connector with spring terminals

CS MP206M0 programmable multifunction safety module

Main features

- For safety applications up to SIL 3/PL e
- Supply voltage: 24 Vdc
- Gemnis Studio for easy and intuitive programming and program simulation
- Large selection of logical blocks for the management of external devices and programs
- Custom configured versions available on request

Quality marks:

EC type examination certificate: M6A 075157 0032
UL approval: E131787
CCC approval: 2024010305656748
TÜV SÜD approval: Z10 075157 0031
EAC approval: RU Д-IT.PA07.B.37848/24

General data

Parameter:	Value:	Page:
"Maximum SIL" secondo EN IEC 62061	up to "Maximum SIL 3"	
Performance Level (PL) acc. to EN ISO 13849-1	up to PL e	
Safety category acc. to EN ISO 13849-1	up to cat. 4	
$MTTF_D$	3314 years	
PFH_D	1.09E-09 h^{-1}	
Mission time	20 years	
System response time	< 30 ms	
Dimensions (HxLxW)	111.5x45x99 mm	
Housing data		119 1)
Environmental data		119 2)
Power supply		119 3)
In compliance with standards		119 4)
Programming software	Gemnis Studio	119 5)
USB port	Yes	
Safety inputs (Ix)	8	119 6)
Test outputs (Tx)	4	120 10)
Semiconductor signalling output circuits (Ox)	12	120 11)
Semiconductor safety output circuits (OSx)	4 PNP	120 12)

Pin assignment

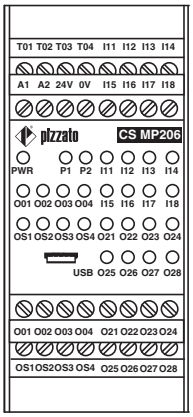

Internal wiring diagram

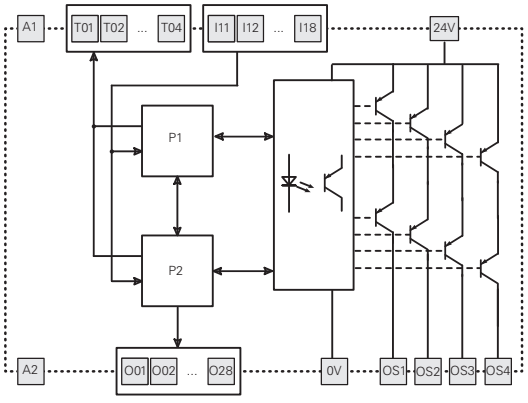

Code structure

CS MP206M0

Connection type	
M	Connector with screw terminals
X	Connector with spring terminals

CS MP207M0 programmable multifunction safety module

Main features

- For safety applications up to SIL 3/PL e
- Supply voltage: 24 Vdc
- Gemnis Studio for easy and intuitive programming and program simulation
- Large selection of logical blocks for the management of external devices and programs
- Custom configured versions available on request

Quality marks:

EC type examination certificate: M6A 075157 0032
UL approval: E131787
CCC approval: 2024010305656748
TÜV SÜD approval: Z10 075157 0031
EAC approval: RU Д-IT.PA07.B.37848/24

General data

Parameter:	Value:	Page:
"Maximum SIL" secondo EN IEC 62061	up to "Maximum SIL 3"	
Performance Level (PL) acc. to EN ISO 13849-1	up to PL e	
Safety category acc. to EN ISO 13849-1	up to cat. 4	
$MTTF_D$	431 years	
PFH_D	7.08E-09 h^{-1}	
Mission time	20 years	
System response time	< 30 ms	
Dimensions (HxLxW)	111.5x45x99 mm	
Housing data		119 1)
Environmental data		119 2)
Power supply		119 3)
In compliance with standards		119 4)
Programming software	Gemnis Studio	119 5)
USB port	Yes	
Safety inputs (Ix)	4	119 6)
Inputs for 4-20 mA analogue signals (Cx)	2	119 8)
Test outputs (Tx)	4	120 10)
Semiconductor signalling output circuits (Ox)	4	120 11)
Semiconductor safety output circuits (OSx)	4 PNP	120 12)

Pin assignment

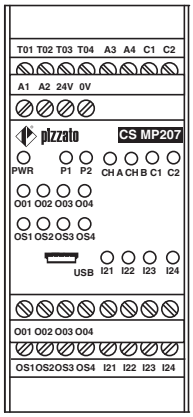

Internal wiring diagram

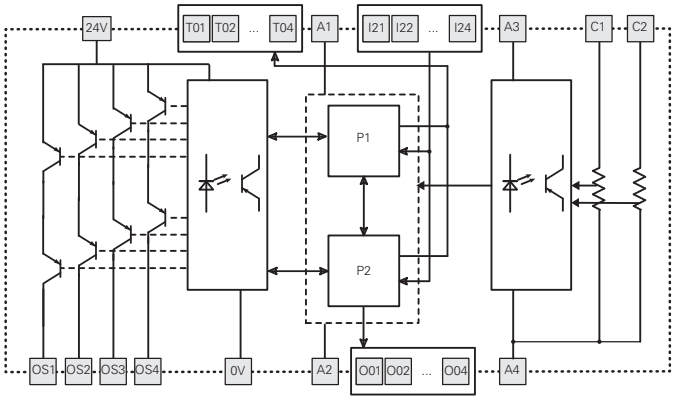

Code structure

CS MP207M0

Connection type	
M	Connector with screw terminals
X	Connector with spring terminals

CS MP208M0 programmable multifunction safety module

Main features

- For safety applications up to SIL 3/PL e
- Supply voltage: 24 Vdc
- Gemnis Studio for easy and intuitive programming and program simulation
- Large selection of logical blocks for the management of external devices and programs
- Custom configured versions available on request

General data

Parameter:	Value:	Page:
"Maximum SIL" secondo EN IEC 62061	up to "Maximum SIL 3"	
Performance Level (PL) acc. to EN ISO 13849-1	up to PL e	
Safety category acc. to EN ISO 13849-1	up to cat. 4	
$MTTF_D$	633 years	
PFH_D	7.02E-09 h^{-1}	
Mission time	20 years	
System response time	< 30 ms	
Dimensions (HxLxW)	111.5x45x99 mm	
Housing data		119 1)
Environmental data		119 2)
Power supply		119 3)
In compliance with standards		119 4)
Programming software	Gemnis Studio	119 5)
USB port	Yes	
Safety inputs (Ix)	16	119 6)
Test outputs (Tx)	4	120 10)
Semiconductor safety output circuits (OSx)	8 PNP	120 13)

Quality marks:

EC type examination certificate: M6A 075157 0032
UL approval: E131787
CCC approval: 2024010305656748
TÜV SÜD approval: Z10 075157 0031
EAC approval: RU Д-IT.PA07.B.37848/24

Pin assignment

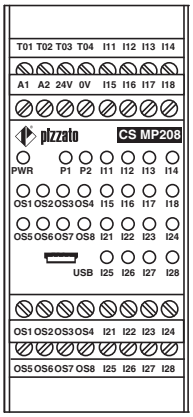

Internal wiring diagram

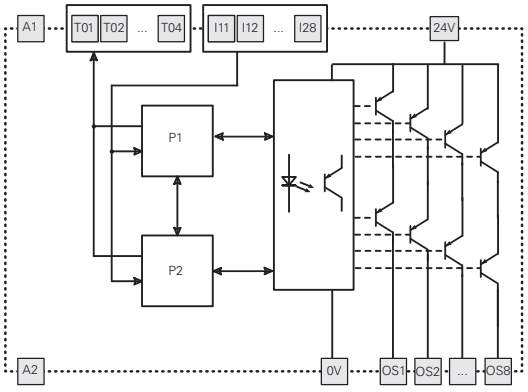

Code structure

CS MP208M0

Connection type	
M	Connector with screw terminals
X	Connector with spring terminals

CS MP301M0 programmable multifunction safety module

Main features

- For safety applications up to SIL 3/PL e
- Supply voltage: 24 Vdc
- Gemnis Studio for easy and intuitive programming and program simulation
- Large selection of logical blocks for the management of external devices and programs
- Custom configured versions available on request

Quality marks:

EC type examination certificate: M6A 075157 0032
UL approval: E131787
CCC approval: 2024010305656748
TÜV SÜD approval: Z10 075157 0031
EAC approval: RU Д-IT.PA07.B.37848/24

General data

Parameter:	Value:	Page:
"Maximum SIL" secondo EN IEC 62061	up to "Maximum SIL 3"	
Performance Level (PL) acc. to EN ISO 13849-1	up to PL e	
Safety category acc. to EN ISO 13849-1	up to cat. 4	
$MTTF_D$	128 years	
PFH_D	1.88E-09 h^{-1}	
Mission time	20 years	
System response time	< 40 ms	
Dimensions (HxLxW)	111.5x67.5x99 mm	
Housing data		119 1)
Environmental data		119 2)
Power supply		119 3)
In compliance with standards		119 4)
Programming software	Gemnis Studio	119 5)
USB port	Yes	
Safety inputs (Ix)	24	119 6)
Test outputs (Tx)	8	120 10)
Semiconductor signalling output circuits (Ox)	4	120 11)
Safety relay circuits	3NO	120 14)

Pin assignment

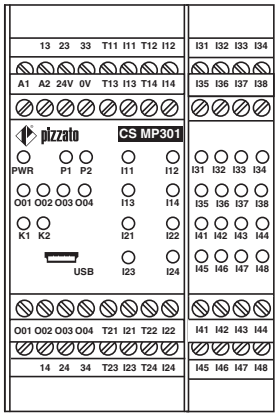

Internal wiring diagram

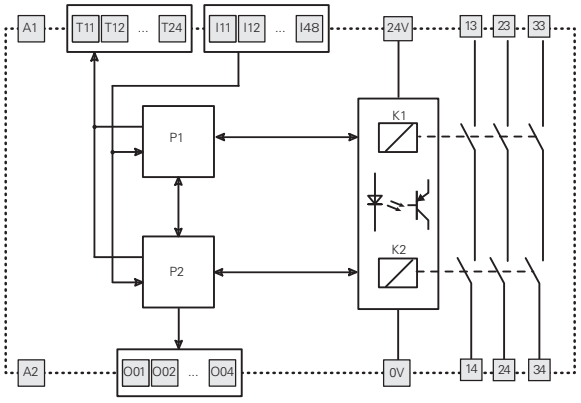

Code structure

CS MP301M0

Connection type	
M	Connector with screw terminals
X	Connector with spring terminals

CS MP302M0 programmable multifunction safety module

Main features

- For safety applications up to SIL 3/PL e
- Supply voltage: 24 Vdc
- Gemnis Studio for easy and intuitive programming and program simulation
- Large selection of logical blocks for the management of external devices and programs
- Custom configured versions available on request

Quality marks:

EC type examination certificate: M6A 075157 0032
UL approval: E131787
CCC approval: 2024010305656748
TÜV SÜD approval: Z10 075157 0031
EAC approval: RU Д-IT.PA07.B.37848/24

General data

Parameter:	Value:	Page:
"Maximum SIL" secondo EN IEC 62061	up to "Maximum SIL 3"	
Performance Level (PL) acc. to EN ISO 13849-1	up to PL e	
Safety category acc. to EN ISO 13849-1	up to cat. 4	
$MTTF_D$	535 years	
PFH_D	1.57E-09 h^{-1}	
Mission time	20 years	
System response time	< 30 ms	
Dimensions (HxLxW)	111.5x67.5x99 mm	
Housing data		119 1)
Environmental data		119 2)
Power supply		119 3)
In compliance with standards		119 4)
Programming software	Gemnis Studio	119 5)
USB port	Yes	
Safety inputs (Ix)	24	119 6)
Test outputs (Tx)	12	120 10)
Semiconductor signalling output circuits (Ox)	4	120 11)
Semiconductor safety output circuits (OSx)	4 PNP	120 12)

Pin assignment

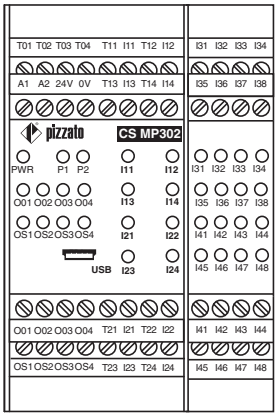

Internal wiring diagram

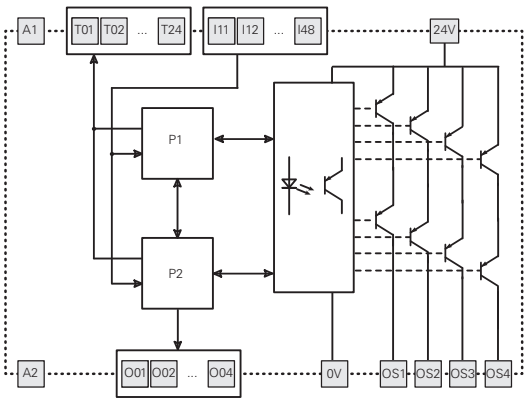

Code structure

CS MP302M0

Connection type	
M	Connector with screw terminals
X	Connector with spring terminals

CS MP303M0 programmable multifunction safety module

Main features

- For safety applications up to SIL 3/PL e
- Supply voltage: 24 Vdc
- Gemnis Studio for easy and intuitive programming and program simulation
- Large selection of logical blocks for the management of external devices and programs
- Custom configured versions available on request

Quality marks:

EC type examination certificate: M6A 075157 0032
UL approval: E131787
CCC approval: 2024010305656748
TÜV SÜD approval: Z10 075157 0031
EAC approval: RU Д-IT.PA07.B.37848/24

General data

Parameter:	Value:	Page:
"Maximum SIL" secondo EN IEC 62061	up to "Maximum SIL 3"	
Performance Level (PL) acc. to EN ISO 13849-1	up to PL e	
Safety category acc. to EN ISO 13849-1	up to cat. 4	
$MTTF_D$	485 years	
PFH_D	1.76E-09 h^{-1}	
Mission time	20 years	
System response time	< 30 ms	
Dimensions (HxLxW)	111.5x67.5x99 mm	
Housing data		119 1)
Environmental data		119 2)
Power supply		119 3)
In compliance with standards		119 4)
Programming software	Gemnis Studio	119 5)
USB port	Yes	
Safety inputs (Ix)	32	119 6)
Test outputs (Tx)	4	120 10)
Semiconductor signalling output circuits (Ox)	4	120 11)
Semiconductor safety output circuits (OSx)	4 PNP	120 12)

Pin assignment

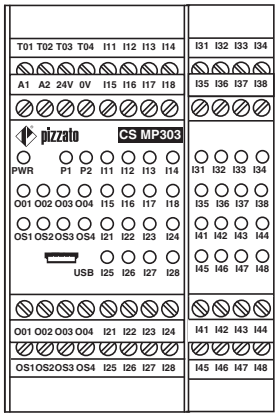

Internal wiring diagram

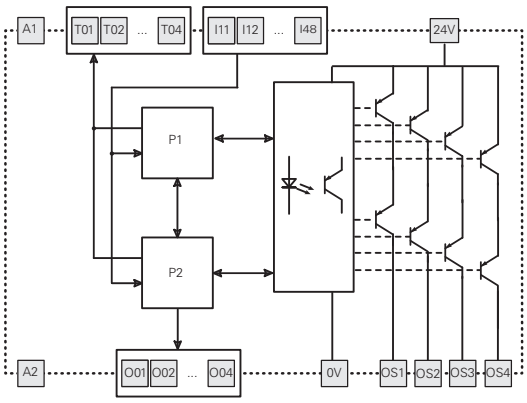

Code structure

CS MP303M0

Connection type	
M	Connector with screw terminals
X	Connector with spring terminals

CS MP304M0 programmable multifunction safety module

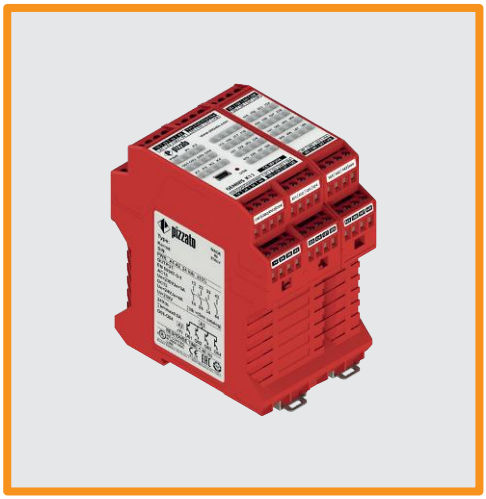

Main features

- For safety applications up to SIL 3/PL e
- Supply voltage: 24 Vdc
- Gemnis Studio for easy and intuitive programming and program simulation
- Large selection of logical blocks for the management of external devices and programs
- Custom configured versions available on request

Quality marks:

EC type examination certificate: M6A 075157 0032
UL approval: E131787
CCC approval: 2024010305656748
TÜV SÜD approval: Z10 075157 0031
EAC approval: RU Д-IT.PA07.B.37848/24

General data

Parameter:	Value:	Page:
"Maximum SIL" secondo EN IEC 62061	up to "Maximum SIL 3"	
Performance Level (PL) acc. to EN ISO 13849-1	up to PL e	
Safety category acc. to EN ISO 13849-1	up to cat. 4	
$MTTF_D$	98 years	
PFH_D	2.05E-09 h^{-1}	
Mission time	20 years	
System response time	< 40 ms	
Dimensions (HxLxW)	111.5x67.5x99 mm	
Housing data		119 1)
Environmental data		119 2)
Power supply		119 3)
In compliance with standards		119 4)
Programming software	Gemnis Studio	119 5)
USB port	Yes	
Safety inputs (Ix)	28	119 6)
Test outputs (Tx)	4	120 10)
Semiconductor signalling output circuits (Ox)	4	120 11)
Safety relay circuits	3NO+1NO	120 14)

Pin assignment

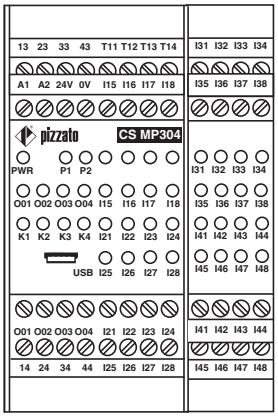

Internal wiring diagram

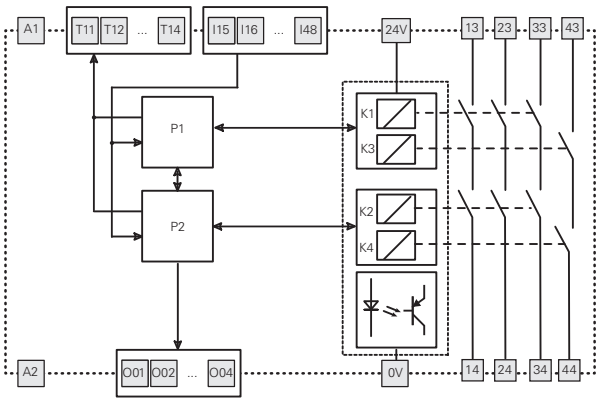

Code structure

CS MP304M0

Connection type	
M	Connector with screw terminals
X	Connector with spring terminals

CS MP305M0 programmable multifunction safety module

Main features

- For safety applications up to SIL 3/PL e
- Supply voltage: 24 Vdc
- Gemnis Studio for easy and intuitive programming and program simulation
- Large selection of logical blocks for the management of external devices and programs
- Custom configured versions available on request

Quality marks:

EC type examination certificate: M6A 075157 0032
UL approval: E131787
CCC approval: 2024010305656748
TÜV SÜD approval: Z10 075157 0031
EAC approval: RU Д-IT.PA07.B.37848/24

General data

Parameter:	Value:	Page:
"Maximum SIL" secondo EN IEC 62061	up to "Maximum SIL 3"	
Performance Level (PL) acc. to EN ISO 13849-1	up to PL e	
Safety category acc. to EN ISO 13849-1	up to cat. 4	
$MTTF_D$	535 years	
PFH_D	1.57E-09 h^{-1}	
Mission time	20 years	
System response time	< 30 ms	
Dimensions (HxLxW)	111.5x67.5x99 mm	
Housing data		119 1)
Environmental data		119 2)
Power supply		119 3)
In compliance with standards		119 4)
Programming software	Gemnis Studio	119 5)
USB port	Yes	
Safety inputs (Ix)	24	119 6)
Test outputs (Tx)	4	120 10)
Semiconductor signalling output circuits (Ox)	12	120 11)
Semiconductor safety output circuits (OSx)	4 PNP	120 12)

Pin assignment

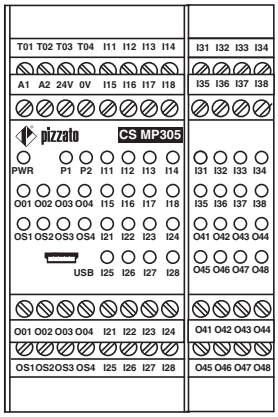

Internal wiring diagram

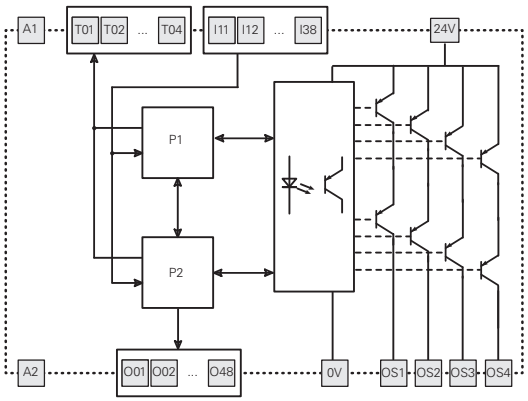

Code structure

CS MP305M0

Connection type	
M	Connector with screw terminals
X	Connector with spring terminals

CS MP306M0 programmable multifunction safety module

Main features

- For safety applications up to SIL 3/PL e
- Supply voltage: 24 Vdc
- Gemnis Studio for easy and intuitive programming and program simulation
- Large selection of logical blocks for the management of external devices and programs
- Custom configured versions available on request

Quality marks:

EC type examination certificate: M6A 075157 0032
UL approval: E131787
CCC approval: 2024010305656748
TÜV SÜD approval: Z10 075157 0031
EAC approval: RU Д-IT.PA07.B.37848/24

General data

Parameter:	Value:	Page:
"Maximum SIL" secondo EN IEC 62061	up to "Maximum SIL 3"	
Performance Level (PL) acc. to EN ISO 13849-1	up to PL e	
Safety category acc. to EN ISO 13849-1	up to cat. 4	
$MTTF_D$	100 years	
PFH_D	1.86E-09 h^{-1}	
Mission time	20 years	
System response time	< 40 ms	
Dimensions (HxLxW)	111.5x67.5x99 mm	
Housing data		119 1)
Environmental data		119 2)
Power supply		119 3)
In compliance with standards		119 4)
Programming software	Gemnis Studio	119 5)
USB port	Yes	
Safety inputs (Ix)	20	119 6)
Test outputs (Tx)	4	120 10)
Semiconductor signalling output circuits (Ox)	12	120 11)
Safety relay circuits	3NO+1NO	120 14)

Pin assignment

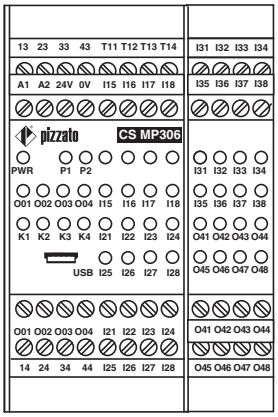

Internal wiring diagram

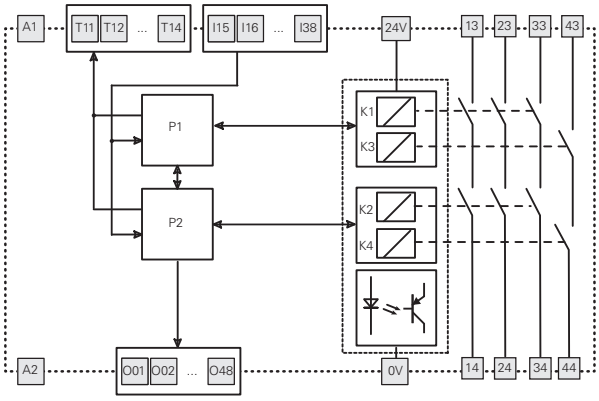

Code structure

CS MP306M0

Connection type	
M	Connector with screw terminals
X	Connector with spring terminals

CS MP307M0 programmable multifunction safety module

Main features

- For safety applications up to SIL 3/PL e
- Supply voltage: 24 Vdc
- Gemnis Studio for easy and intuitive programming and program simulation
- Large selection of logical blocks for the management of external devices and programs
- Custom configured versions available on request

Quality marks:

EC type examination certificate: M6A 075157 0032
UL approval: E131787
CCC approval: 2024010305656748
TÜV SÜD approval: Z10 075157 0031
EAC approval: RU Д-IT.PA07.B.37848/24

General data

Parameter:	Value:	Page:
"Maximum SIL" secondo EN IEC 62061	up to "Maximum SIL 3"	
Performance Level (PL) acc. to EN ISO 13849-1	up to PL e	
Safety category acc. to EN ISO 13849-1	up to cat. 4	
$MTTF_D$	289 years	
PFH_D	8.38E-09 h^{-1}	
Mission time	20 years	
System response time	< 30 ms	
Dimensions (HxLxW)	111.5x67.5x99 mm	
Housing data		119 1)
Environmental data		119 2)
Power supply		119 3)
In compliance with standards		119 4)
Programming software	Gemnis Studio	119 5)
USB port	Yes	
Safety inputs (Ix)	8	119 6)
Decoupled digital inputs (Jx)	4	119 7)
Inputs for 4-20 mA analogue signals (Cx)	2	119 8)
Inputs for frequency signals from 0 to 4 kHz (Fx)	4	120 9)
Test outputs (Tx)	4	120 10)
Semiconductor signalling output circuits (Ox)	4	120 11)
Semiconductor safety output circuits (OSx)	4 PNP	120 12)

Pin assignment

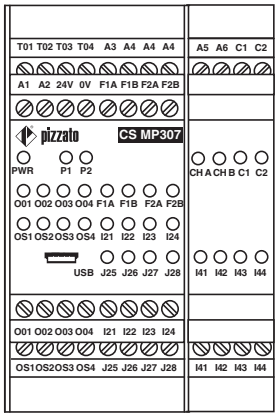

Internal wiring diagram

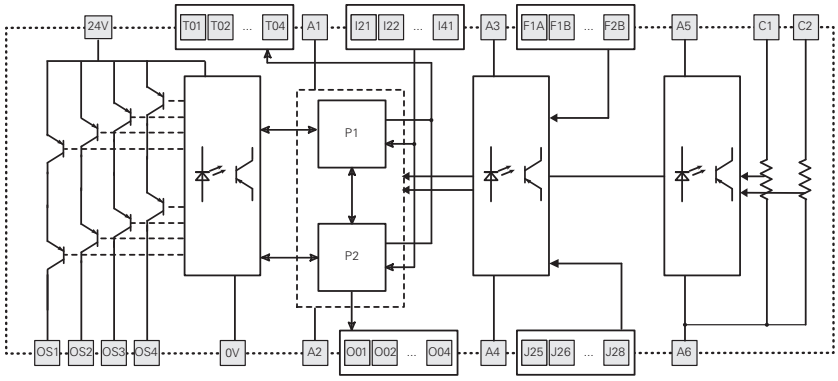

Code structure

CS MP307M0

Connection type	
M	Connector with screw terminals
X	Connector with spring terminals

CS MP308M0 programmable multifunction safety module

Main features

- For safety applications up to SIL 3/PL e
- Supply voltage: 24 Vdc
- Gemnis Studio for easy and intuitive programming and program simulation
- Large selection of logical blocks for the management of external devices and programs
- Custom configured versions available on request

Quality marks:

EC type examination certificate: M6A 075157 0032
UL approval: E131787
CCC approval: 2024010305656748
TÜV SÜD approval: Z10 075157 0031
EAC approval: RU Д-IT.PA07.B.37848/24

General data

Parameter:	Value:	Page:
"Maximum SIL" secondo EN IEC 62061	up to "Maximum SIL 3"	
Performance Level (PL) acc. to EN ISO 13849-1	up to PL e	
Safety category acc. to EN ISO 13849-1	up to cat. 4	
$MTTF_D$	548 years	
PFH_D	7.27E-09 h^{-1}	
Mission time	20 years	
System response time	< 30 ms	
Dimensions (HxLxW)	111.5x67.5x99 mm	
Housing data		119 1)
Environmental data		119 2)
Power supply		119 3)
In compliance with standards		119 4)
Programming software	Gemnis Studio	119 5)
USB port	Yes	
Safety inputs (Ix)	24	119 6)
Test outputs (Tx)	4	120 10)
Semiconductor signalling output circuits (Ox)	8	120 11)
Semiconductor safety output circuits (OSx)	8 PNP	120 13)

Pin assignment

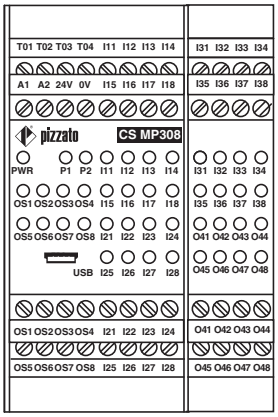

Internal wiring diagram

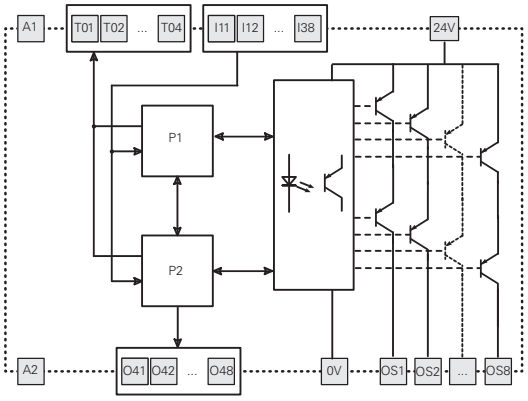

Code structure

CS MP308M0

Connection type	
M	Connector with screw terminals
X	Connector with spring terminals

CS MP309M0 programmable multifunction safety module

Main features

- For safety applications up to SIL 3/PL e
- Supply voltage: 24 Vdc
- Gemnis Studio for easy and intuitive programming and program simulation
- Large selection of logical blocks for the management of external devices and programs
- Custom configured versions available on request

General data

Parameter:	Value:	Page:
"Maximum SIL" secondo EN IEC 62061	up to "Maximum SIL 3"	
Performance Level (PL) acc. to EN ISO 13849-1	up to PL e	
Safety category acc. to EN ISO 13849-1	up to cat. 4	
$MTTF_D$	496 years	
PFH_D	7.46E-09 h^{-1}	
Mission time	20 years	
System response time	< 30 ms	
Dimensions (HxLxW)	111.5x67.5x99 mm	
Housing data		119 1)
Environmental data		119 2)
Power supply		119 3)
In compliance with standards		119 4)
Programming software	Gemnis Studio	119 5)
USB port	Yes	
Safety inputs (Ix)	32	119 6)
Test outputs (Tx)	4	120 10)
Semiconductor safety output circuits (OSx)	8 PNP	120 13)

Quality marks:

EC type examination certificate: M6A 075157 0032
UL approval: E131787
CCC approval: 2024010305656748
TÜV SÜD approval: Z10 075157 0031
EAC approval: RU Д-IT.PA07.B.37848/24

Pin assignment

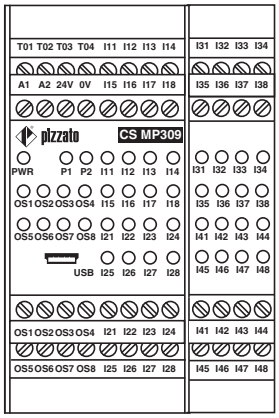

Internal wiring diagram

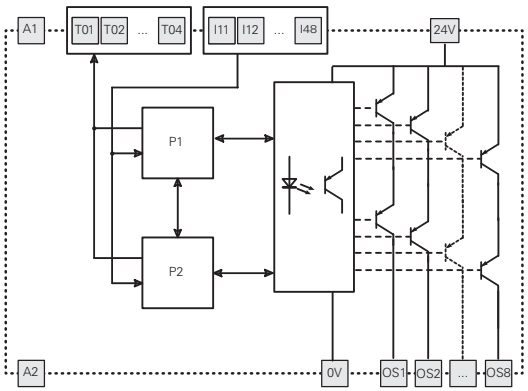

Code structure

CS MP309M0

Connection type	
M	Connector with screw terminals
X	Connector with spring terminals

CS MP310M0 programmable multifunction safety module

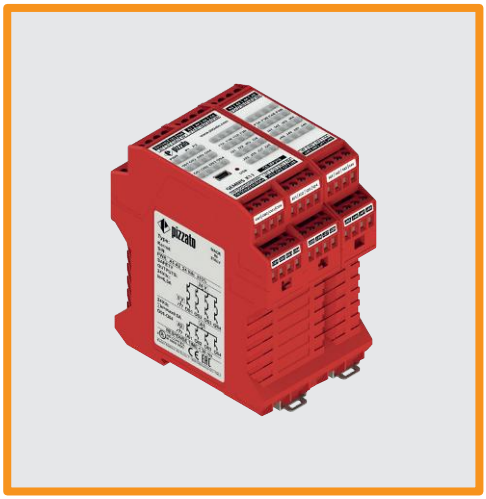

Main features

- For safety applications up to SIL 3/PL e
- Supply voltage: 24 Vdc
- Gemnis Studio for easy and intuitive programming and program simulation
- Large selection of logical blocks for the management of external devices and programs
- Custom configured versions available on request

Quality marks:

EC type examination certificate: M6A 075157 0032
UL approval: E131787
CCC approval: 2024010305656748
TÜV SÜD approval: Z10 075157 0031
EAC approval: RU Д-IT.PA07.B.37848/24

General data

Parameter:	Value:	Page:
"Maximum SIL" secondo EN IEC 62061	up to "Maximum SIL 3"	
Performance Level (PL) acc. to EN ISO 13849-1	up to PL e	
Safety category acc. to EN ISO 13849-1	up to cat. 4	
$MTTF_D$	288 years	
PFH_D	3.46E-09 h^{-1}	
Mission time	20 years	
System response time	< 30 ms	
Dimensions (HxLxW)	111.5x67.5x99 mm	
Housing data		119 1)
Environmental data		119 2)
Power supply		119 3)
In compliance with standards		119 4)
Programming software	Gemnis Studio	119 5)
USB port	Yes	
Safety inputs (Ix)	8	119 6)
Decoupled digital inputs (Jx)	8	119 7)
Inputs for frequency signals from 0 to 4 kHz (Fx)	8	120 9)
Test outputs (Tx)	4	120 10)
Semiconductor signalling output circuits (Ox)	4	120 11)
Semiconductor safety output circuits (OSx)	4 PNP	120 12)

Pin assignment

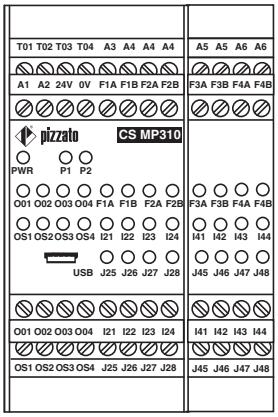

Internal wiring diagram

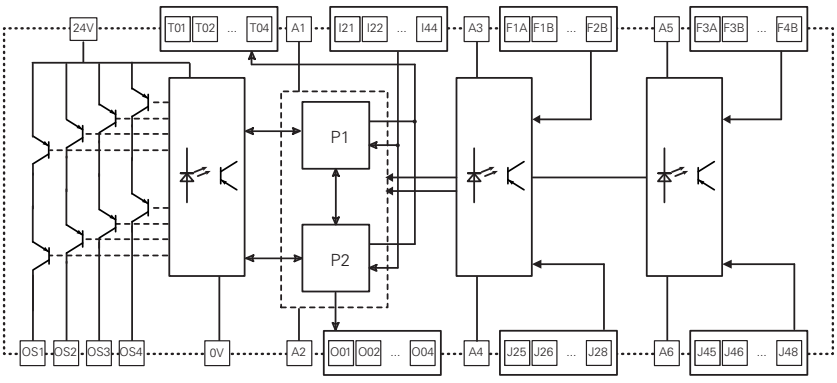

Code structure

CS MP310M0

Connection type	
M	Connector with screw terminals
X	Connector with spring terminals

CS MP311M0 programmable multifunction safety module

Main features

- For safety applications up to SIL 3/PL e
- Supply voltage: 24 Vdc
- Gemnis Studio for easy and intuitive programming and program simulation
- Large selection of logical blocks for the management of external devices and programs
- Custom configured versions available on request

Quality marks:

EC type examination certificate: M6A 075157 0032
UL approval: E131787
CCC approval: 2024010305656748
TÜV SÜD approval: Z10 075157 0031
EAC approval: RU Д-IT.PA07.B.37848/24

General data

Parameter:	Value:	Page:
"Maximum SIL" secondo EN IEC 62061	up to "Maximum SIL 3"	
Performance Level (PL) acc. to EN ISO 13849-1	up to PL e	
Safety category acc. to EN ISO 13849-1	up to cat. 4	
$MTTF_D$	363 years	
PFH_D	7.52E-09 h^{-1}	
Mission time	20 years	
System response time	< 30 ms	
Dimensions (HxLxW)	111.5x67.5x99 mm	
Housing data		119 1)
Environmental data		119 2)
Power supply		119 3)
In compliance with standards		119 4)
Programming software	Gemnis Studio	119 5)
USB port	Yes	
Safety inputs (Ix)	20	119 6)
Inputs for 4-20 mA analogue signals (Cx)	2	119 8)
Test outputs (Tx)	4	120 10)
Semiconductor signalling output circuits (Ox)	4	120 11)
Semiconductor safety output circuits (OSx)	4 PNP	120 12)

Pin assignment

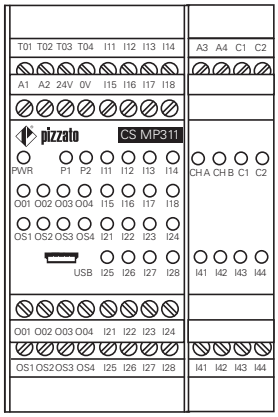

Internal wiring diagram

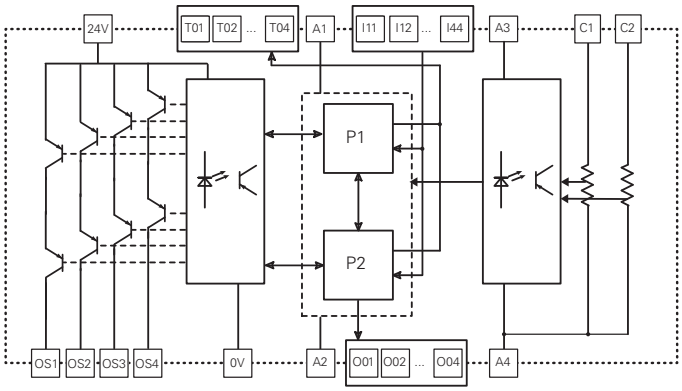

Code structure

CS MP311M0

Connection type	
M	Connector with screw terminals
X	Connector with spring terminals

CS MP312M0 programmable multifunction safety module

Main features

- For safety applications up to SIL 3/PL e
- Supply voltage: 24 Vdc
- Gemnis Studio for easy and intuitive programming and program simulation
- Large selection of logical blocks for the management of external devices and programs
- Custom configured versions available on request

Quality marks:

EC type examination certificate: M6A 075157 0032
UL approval: E131787
CCC approval: 2024010305656748
TÜV SÜD approval: Z10 075157 0031
EAC approval: RU Д-IT.PA07.B.37848/24

General data

Parameter:	Value:	Page:
"Maximum SIL" secondo EN IEC 62061	up to "Maximum SIL 3"	
Performance Level (PL) acc. to EN ISO 13849-1	up to PL e	
Safety category acc. to EN ISO 13849-1	up to cat. 4	
$MTTF_D$	380 years	
PFH_D	8,20E-09 h^{-1}	
Mission time	20 years	
System response time	< 30 ms	
Dimensions (HxLxW)	111.5x67.5x99 mm	
Housing data		119 1)
Environmental data		119 2)
Power supply		119 3)
In compliance with standards		119 4)
Programming software	Gemnis Studio	119 5)
USB port	Yes	
Safety inputs (Ix)	16	119 6)
Decoupled digital inputs (Jx)	4	119 7)
Inputs for frequency signals from 0 to 4 kHz (Fx)	4	120 9)
Test outputs (Tx)	8	120 10)
Semiconductor safety output circuits (OSx)	8 PNP	120 12)

Pin assignment

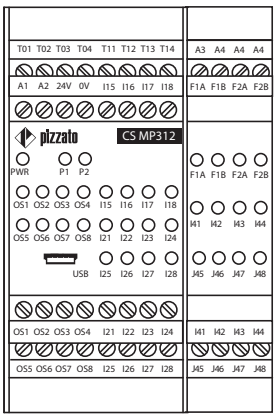

Internal wiring diagram

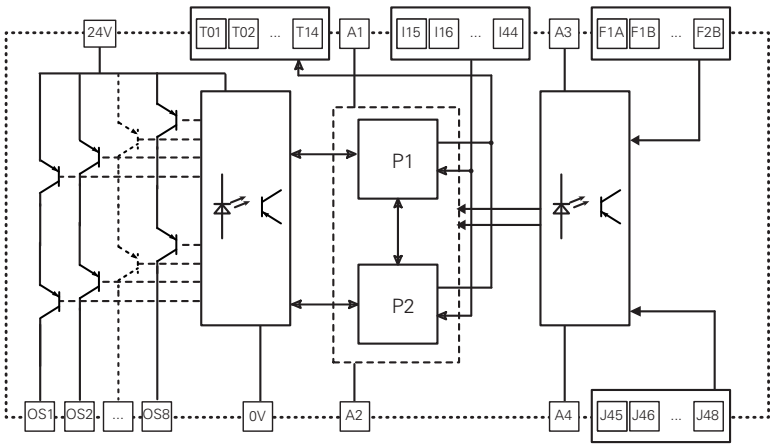

Code structure

CS MP312M0

Connection type	
M	Connector with screw terminals
X	Connector with spring terminals

CS MP401M0 programmable multifunction safety module

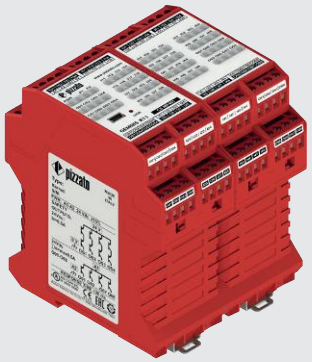

Main features

- For safety applications up to SIL 3/PL e
- Supply voltage: 24 Vdc
- Gemnis Studio for easy and intuitive programming and program simulation
- Large selection of logical blocks for the management of external devices and programs
- Custom configured versions available on request

Quality marks:

EC type examination certificate: M6A 075157 0032
UL approval: E131787
CCC approval: 2024010305656748
TÜV SÜD approval: Z10 075157 0031
EAC approval: RU Д-IT.PA07.B.37848/24

General data

Parameter:	Value:	Page:
"Maximum SIL" secondo EN IEC 62061	up to "Maximum SIL 3"	
Performance Level (PL) acc. to EN ISO 13849-1	up to PL e	
Safety category acc. to EN ISO 13849-1	up to cat. 4	
$MTTF_D$	434 years	
PFH_D	1.73E-09 h^{-1}	
Mission time	20 years	
System response time	< 30 ms	
Dimensions (HxLxW)	111.5x90x99 mm	
Housing data		119 1)
Environmental data		119 2)
Power supply		119 3)
In compliance with standards		119 4)
Programming software	Gemnis Studio	119 5)
USB port	Yes	
Safety inputs (Ix)	40	119 6)
Test outputs (Tx)	4	120 10)
Semiconductor signalling output circuits (Ox)	12	120 11)
Semiconductor safety output circuits (OSx)	4 PNP	120 12)

Pin assignment

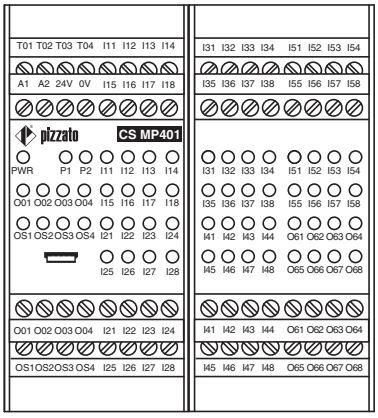

Internal wiring diagram

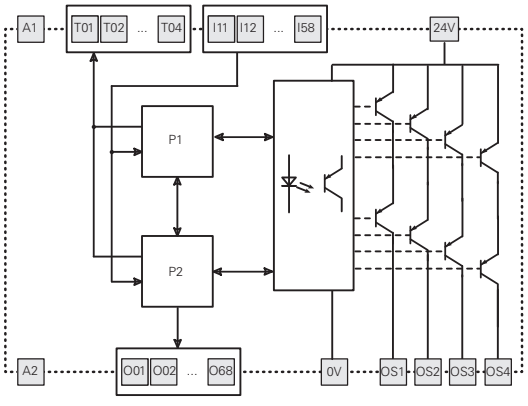

Code structure

CS MP401M0

Connection type	
M	Connector with screw terminals
X	Connector with spring terminals

CS MP402M0 programmable multifunction safety module

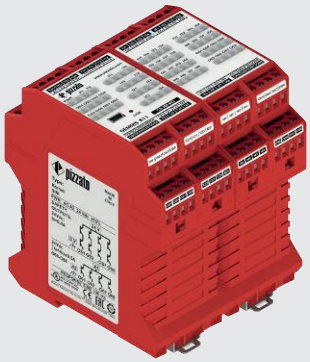

Main features

- For safety applications up to SIL 3/PL e
- Supply voltage: 24 Vdc
- Gemnis Studio for easy and intuitive programming and program simulation
- Large selection of logical blocks for the management of external devices and programs
- Custom configured versions available on request

Quality marks:

EC type examination certificate: M6A 075157 0032
UL approval: E131787
CCC approval: 2024010305656748
TÜV SÜD approval: Z10 075157 0031
EAC approval: RU Д-IT.PA07.B.37848/24

General data

Parameter:	Value:	Page:
"Maximum SIL" secondo EN IEC 62061	up to "Maximum SIL 3"	
Performance Level (PL) acc. to EN ISO 13849-1	up to PL e	
Safety category acc. to EN ISO 13849-1	up to cat. 4	
$MTTF_D$	478 years	
PFH_D	7.24E-09 h^{-1}	
Mission time	20 years	
System response time	< 30 ms	
Dimensions (HxLxW)	111.5x90x99 mm	
Housing data		119 1)
Environmental data		119 2)
Power supply		119 3)
In compliance with standards		119 4)
Programming software	Gemnis Studio	119 5)
USB port	Yes	
Safety inputs (Ix)	32	119 6)
Test outputs (Tx)	12	120 10)
Semiconductor signalling output circuits (Ox)	8	120 11)
Semiconductor safety output circuits (OSx)	8 PNP	120 13)

Pin assignment

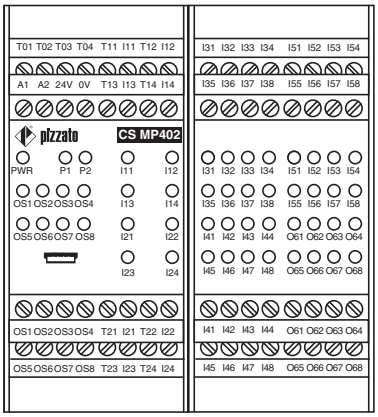

Internal wiring diagram

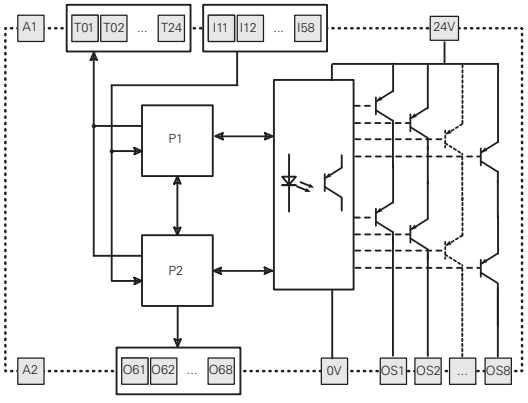

Code structure

CS MP402M0

Connection type	
M	Connector with screw terminals
X	Connector with spring terminals

CS MP403M0 programmable multifunction safety module

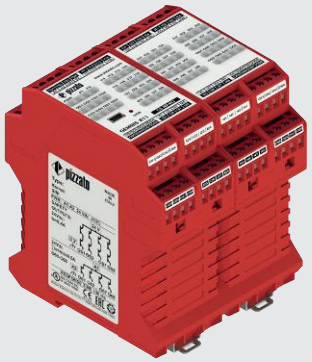

Main features

- For safety applications up to SIL 3/PL e
- Supply voltage: 24 Vdc
- Gemnis Studio for easy and intuitive programming and program simulation
- Large selection of logical blocks for the management of external devices and programs
- Custom configured versions available on request

Quality marks:

EC type examination certificate: M6A 075157 0032
UL approval: E131787
CCC approval: 2024010305656748
TÜV SÜD approval: Z10 075157 0031
EAC approval: RU Д-IT.PA07.B.37848/24

General data

Parameter:	Value:	Page:
"Maximum SIL" secondo EN IEC 62061	up to "Maximum SIL 3"	
Performance Level (PL) acc. to EN ISO 13849-1	up to PL e	
Safety category acc. to EN ISO 13849-1	up to cat. 4	
$MTTF_D$	438 years	
PFH_D	7.42E-09 h^{-1}	
Mission time	20 years	
System response time	< 30 ms	
Dimensions (HxLxW)	111.5x90x99 mm	
Housing data		119 1)
Environmental data		119 2)
Power supply		119 3)
In compliance with standards		119 4)
Programming software	Gemnis Studio	119 5)
USB port	Yes	
Safety inputs (Ix)	40	119 6)
Test outputs (Tx)	4	120 10)
Semiconductor signalling output circuits (Ox)	8	120 11)
Semiconductor safety output circuits (OSx)	8 PNP	120 13)

Pin assignment

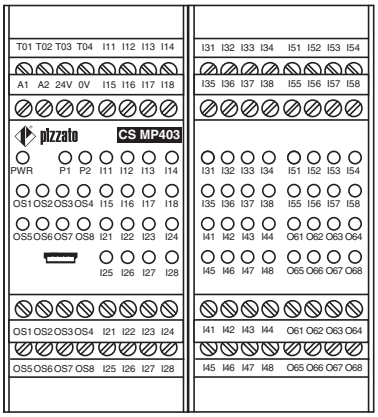

Internal wiring diagram

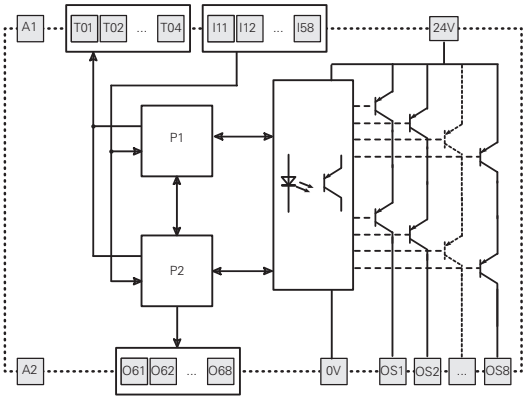

Code structure

CS MP403M0

Connection type	
M	Connector with screw terminals
X	Connector with spring terminals

CS MP406M0 programmable multifunction safety module

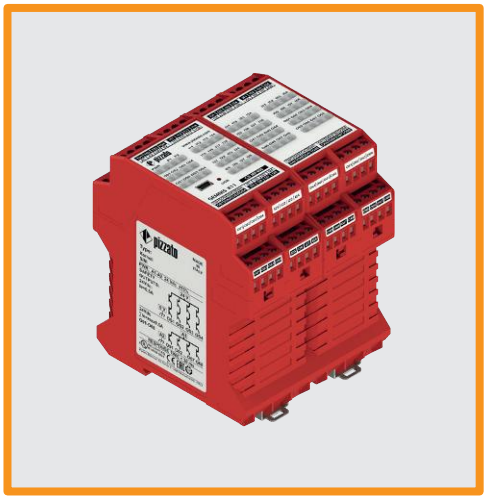

Main features

- For safety applications up to SIL 3/PL e
- Supply voltage: 24 Vdc
- Gemnis Studio for easy and intuitive programming and program simulation
- Large selection of logical blocks for the management of external devices and programs
- Custom configured versions available on request

Quality marks:

EC type examination certificate: M6A 075157 0032
UL approval: E131787
CCC approval: 2024010305656748
TÜV SÜD approval: Z10 075157 0031
EAC approval: RU Д-IT.PA07.B.37848/24

General data

Parameter:	Value:	Page:
"Maximum SIL" secondo EN IEC 62061	up to "Maximum SIL 3"	
Performance Level (PL) acc. to EN ISO 13849-1	up to PL e	
Safety category acc. to EN ISO 13849-1	up to cat. 4	
$MTTF_D$	473 years	
PFH_D	1.54E-09 h^{-1}	
Mission time	20 years	
System response time	< 30 ms	
Dimensions (HxLxW)	111.5x90x99 mm	
Housing data		119 1)
Environmental data		119 2)
Power supply		119 3)
In compliance with standards		119 4)
Programming software	Gemnis Studio	119 5)
USB port	Yes	
Safety inputs (Ix)	32	119 6)
Test outputs (Tx)	4	120 10)
Semiconductor signalling output circuits (Ox)	20	120 11)
Semiconductor safety output circuits (OSx)	4 PNP	120 13)

Pin assignment

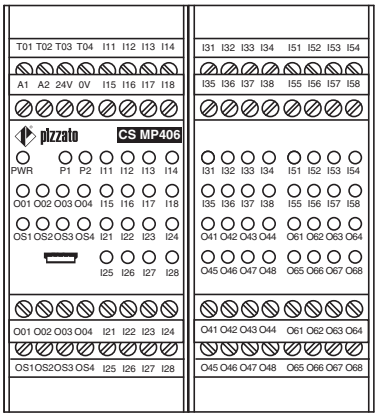

Internal wiring diagram

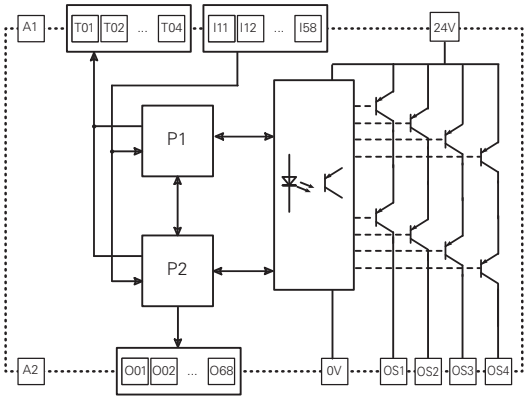

Code structure

CS MP406M0

Connection type	
M	Connector with screw terminals
X	Connector with spring terminals

Technical data

1) Housing

Housing:	Polyamide PA 66, self-extinguishing V0 acc. to UL 94
Protection degree:	IP40 (housing) IP20 (terminal strip)
Dimensions, cable cross sections, terminal tightening torque:	Page 136, design C/E

2) Environmental

Operating temperature:	0°C … +55°C
Storage temperature:	-20°C … +70°C
Pollution degree:	external 3, internal 2
Overvoltage category:	II

3) Power supply

Rated voltage A1-A2 (U_n):	24 Vdc
Max. DC residual ripple in DC:	10%
Supply voltage tolerance:	±15% of U_n
Rated consumption (w/o load):	< 3 W
Protection against short circuits:	PTC resistance, Ih=1.5 A
PTC response time:	Response > 100 ms, reset > 3 s
Internal protection against short circuits on outputs (Tx, Ox):	Electronic
Maximum current output of the module as the total current of the Ox and Tx outputs:	0.5 A
Self-test duration on startup:	< 2 s

4) Compliance with standards

EN 60947-1, EN 60947-5-1, EN 60204-1, EN ISO 13849-1, EN ISO 13855, EN ISO 14118, EN ISO 12100, EN ISO 13850, EN 60529, EN 61000-6-2, EN 61000-6-3, EN 61326-1, EN 61326-3-1, EN 60664-1, EN 62061, EN IEC 63000, UL 508, CSA C22.2 No. 14, GB/T14048.5

Compliance with the requirements of:

Machinery Directive 2006/42/EC, EMC Directive 2014/30/EU, RoHS Directive 2011/65/EU.

Features approved by UL

Electrical ratings:

Input:	4-48 inputs rated 24 V dc, 5 mA
Relay output:	230/240 Vac, 4 A general use, C300 pilot duty
Semiconductor output (when relay is not available):	up to 4 outputs rated 24 V dc, 500 mA or up to 8 outputs rated 24 Vdc, 400 mA
Semiconductor auxiliary output:	up to 32 outputs rated 24 V dc, 500 mA max
Auxiliary analogic outputs:	up to 4 rated 24 V dc, 20 mA max

Notes:
- Use 60 or 75°C copper (Cu) conductor and wire size No. 30-12 AWG, stranded or solid.
- The terminal tightening torque of 5-7 lb in.
- Only for 24 Vac/dc versions: supply from remote Class 2 source or limited voltage limited energy.

- Utiliser des conducteurs en cuivre (Cu) 60 ou 75°C rigides ou flexibles de section 30-12 AWG.
- Couple de serrage des bornes de 5-7 Lb In.
- Seulement pour les versions 24 Vac/dc, alimenter avec sources de classes 2 ou avec tension limitée et énergie limitée.

Features approved by TÜV SÜD

Rated supply voltage U_n: 24 Vdc (-15% … +15%)

Ambient temperature:	0°C … +55°C
Response time:	< 30 ms < 40 ms for versions with relay outputs

In compliance with standards: EN ISO 13849-1:2015 (Cat.4, PL e), EN 61508-1:2010 (SIL 3), EN 61508-2:2010 (SIL 3), EN 61508-3:2010 (SIL 3), EN 62061:2005/A1:2013/A2:2015 (SIL CL 3)

5) Gemnis Studio

The **Gemnis Studio** software is the graphic development environment for the creation, simulation and debugging of programs designed for upload to Gemnis line modules.
The software is licensed to users wishing to program these modules, subject to prior registration at **www.gemnis.com**.
From our website you can download the latest version of the software, which allows you to program the safety modules of the Gemnis family.

Gemnis Studio software minimum download requirements

Computer and processor:	X86 with clock frequency of 1 GHz
Memory:	256 MB
Hard disk:	150 MB
Monitor:	Monitor with 1280×800 resolution or higher
Operating system:	Microsoft Windows 10 or higher .NET 4.6.2 Acrobat Reader

6) Input circuits (Ix)

Voltage and current in the input circuits:	24 V, 5 mA
Input signals:	0-8 V (Off), 12-24 V (On)
Galvanic separation:	No
Minimum duration of input signal:	10 ms
Input signal filtering:	Yes, maximum interference period 0.4 ms
Maximum input resistance:	100 Ω
Maximum input capacitance:	470 nF to ground 470 nF between two conductors

7) Decoupled input circuits (Jx)

Voltage and current in the input circuits:	24 V, 5 mA
Input signals:	0-8 V (Off), 12-24 V (On)
Galvanic separation:	Yes
Insulation voltage (U_i):	500 V
Minimum duration of input signal:	10 ms
Input signal filtering:	Yes, maximum interference period 0.4 ms
Maximum input resistance:	100 Ω
Maximum input capacitance:	470 nF to ground 470 nF between two conductors

NB: Voltage and current values indicated refer to the power supply terminals (Ax, see each module individually) of the board where the Jx type terminals are present.

8) Analogue input circuits (Cx)

Rated supply voltage:	24 Vdc ± 15 %
Analogue input type:	4-20 mA current loop
Measurement range:	0 … 25 mA
Accuracy over entire measurement range:	1 % ± 1 digit
Resolution:	0.01 mA
Input resistance:	100 Ohm
Maximum applicable current:	30 mA
Managed sensors:	"source" type with 2/3 wires
Galvanic separation:	Yes
Insulation voltage (U_i):	500 V

NB: Voltage and current values indicated refer to the power supply terminals (Ax, see each module individually) of the board where the Cx type terminals are present.

9) Frequency input circuits (Fx)

Rated supply voltage:	24 Vdc ± 15 %
Voltage and current in the input circuits:	24 Vdc, 7 mA
Check of the supply voltage of the connected proximity sensors:	24 Vdc ± 20%
Maximum detectable frequency:	4 kHz
Minimum detectable frequency:	1 Hz
Frequency detection accuracy:	1 % ± 1 digit
Resolution:	0.1 Hz
Minimum time for standstill detection:	1 s
Galvanic separation:	Yes
Insulation voltage (U_i):	500 V

NB: Voltage and current values indicated refer to the power supply terminals (Ax, see each module individually) of the board where the Fx type terminals are present.

10) Circuits with Test signals (Tx)

Signal type:	Pulsed 100 Hz 24V/0V, duty cycle 50%
Max. total current:	See Supply
Protected against short circuit:	Yes

11) Semiconductor signalling output circuits (Ox)

Output type:	PNP
Maximum current per output:	0.5 A
Max. total current:	see Supply
Impulse withstand voltage (U_{imp}):	0.8 kV
Rated insulation voltage (U_i):	32 V
Protected against short circuit:	Yes
Galvanic separation:	No

12) Semiconductor safety output circuits (OSx) with 4 safety outputs

Rated voltage 24V-0V:	24 Vdc
Number of outputs:	4
Output type:	PNP
Maximum current per output:	0.5 A
Max. total output current:	2 A
Minimum current:	10 mA
Maximum capacitive load to ground per output:	400 nF
Maximum inductive load per output:	500 mH
Protection fuse:	2 A type gG
Galvanic separation:	Yes
Impulse withstand voltage (U_{imp}):	0.8 kV
Rated insulation voltage (U_i):	32 V
Short circuit detection between outputs:	Yes
Duration of the deactivation impulses at the safety outputs:	< 300 µs

13) Semiconductor safety output circuits (OSx) with 8 safety outputs

Rated voltage 24V-0V:	24 Vdc
Number of outputs:	8
Output type:	PNP
Maximum current per output:	0.4 A
Max. total output current:	3 A
Minimum current:	10 mA
Maximum capacitive load to ground per output:	400 nF
Maximum inductive load per output:	500 mH
Protection fuse:	4 A type gG
Galvanic separation:	Yes
Impulse withstand voltage (U_{imp}):	0.8 kV
Rated insulation voltage (U_i):	32 V
Short circuit detection between outputs:	Yes
Duration of the deactivation impulses at the safety outputs:	< 300 µs

14) Safety relay circuits

Rated voltage 24V-0V:	24 Vdc
Contact type:	Forcibly guided contacts acc. to EN 50205
Material of the contacts:	silver alloy
Maximum switching voltage:	230 Vac; 300 Vdc
Maximum current per contact:	6 A
Max. total current ΣI_{th}^2:	36 A^2
Minimum current:	10 mA
Protection fuse:	4 A type gG
Maximum load:	1380 VA/W
Impulse withstand voltage (U_{imp}):	4 kV
Rated insulation voltage (U_i):	500 V
Utilization category (EN 60947-5-1):	AC15 (Ue=230V, Ie=3A); DC13 (Ue=24V, Ie=4A) (6 op. cycl./min.)
Utilization category (UL 508):	C300
Contact resistance:	< 100 mΩ
Mechanical endurance:	>10 million operating cycles
Electrical endurance:	>100,000 operating cycles
Galvanic separation:	Yes

The number and the load capacity of output contacts can be increased by using expansion modules or contactors.
See pages 75-83.

CS MF pre-programmed multifunction safety modules

Introduction

An increasing number of users requires products which carry out several safety functions without needing the complex management of a safety PLC or the complex wiring of many traditional safety modules. Such problems arise mainly when the safety functions are typically greater than 3 or 4, and/or when managing a safety PLC software (software purchase, training courses, programming of all modules, software management and filing, updates etc.) turns out to be too great an overhead in relation to problem complexity.
Pizzato Elettrica introduces Gemnis, a series of electronic modules which are pre-programmed for specific customer applications or for generic safety macro-functions commonly used in industrial contexts. The following pages list some of the pre-programmed products for generic macro-functions commonly used in the industrial sector. These products are also available for individual purchase. Any customer requiring a product pre-programmed to their particular specification can contact the Pizzato Elettrica technical department (minimum volumes are requested).
The resulting advantages for customers typically include simplified product management (purchase of finished components) and reduced general costs (no software to be installed and managed, products are immediately operational).
All Gemnis series products are able to provide circuit solutions at SIL 3 (EN 62061), PL e (EN ISO 13849-1) or category 4 (EN ISO 13849-1) levels.

Quality marks:

EC type examination certificate:	M6A 075157 0032
UL approval:	E131787
CCC approval:	2024010305656748
TÜV SÜD approval:	Z10 075157 0031
EAC approval:	RU Д-IT.PA07.B.37848/24

Code structure

CS MF201M0-P••

Hardware code	
•••	hardware code

Program code	
P••	program code

Connection type	
M	Connector with screw terminals
X	Connector with spring terminals

Supply voltage	
0	24 Vdc

Product list

Product code	Functions executed		Safety outputs	Signalling outputs	Page
CS MF201M0-P1	Monitoring of 2 guards in AND and 1 emergency stop with automatic start or manual monitored start.	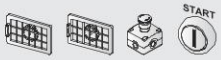	3 NO	4 PNP	123
CS MF202M0-P2	Monitoring of 4 guards in AND, 1 bypass selector, 1 emergency stop, automatic start or manual monitored start, general enabling signal.	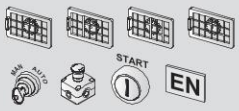	4 PNP	4 PNP	124
CS MF202M0-P3	Monitoring of 6 guards in AND (2NC contacts), 1 emergency stop, automatic start or manual monitored start.	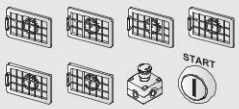	4 PNP	4 PNP	125
CS MF202M0-P4	Monitoring of 6 guards in AND (1NO+1NC contacts), 1 emergency stop, automatic start or manual monitored start.	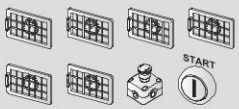	4 PNP	4 PNP	126
CS MF202M0-P5	Monitoring of 4 guards with independent outputs, 1 bypass selector, 1 emergency stop, automatic start or manual monitored start, general enabling signal.	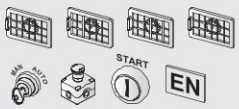	4 PNP	4 PNP	127
CS MF202M0-P6	Monitoring of 2 guards, 1 bypass selector, 1 emergency stop, automatic start or manual monitored start, general enabling signal. Three instantaneous outputs and one delayed output with selector switch with 4 times. Selectable On/Off delay.		4 PNP	4 PNP	128
CS MF202M0-P7	Monitoring of 4 guards (AND linked) with switches with guard locking, operating principle "D", 1 emergency stop, monitored start. Two instantaneous outputs and two delayed outputs with selector switch with 4 times.	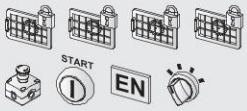	4 PNP	4 PNP	129
CS MF202M0-P8	Monitoring of 4 guards in AND with switches with guard locking, operating principle "E", 1 emergency stop, monitored start. Two instantaneous outputs and two delayed outputs with selector switch with 4 times.	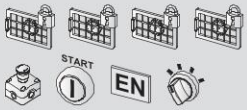	4 PNP	4 PNP	130
CS MF204M0-P10	Monitoring of 4 guards in AND (OSSD outputs) and 1 emergency stop with automatic start or manual monitored start.	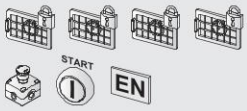	3 NO	4 PNP	131

Legend:

Movable guard monitoring

Monitoring of a movable guard with lock

Emergency stop

Start function

Bypass selector

Time selector

Enabling input

CS MF201M0-P1 pre-programmed module

Product code
CS MF201M0-P1

Main functions
- Monitoring of 2 guards
- Monitoring of 1 emergency stop
- Automatic start or monitored manual start

Outputs
- 3 NO safety outputs
- 4 PNP signalling outputs

Technical data: see CS MP201M0
Dimensions, cable cross sections, terminal tightening torque: page 136, design C
Internal wiring diagram: page 138
Terminal layout: page 138

Application program: P1

The application program stored in the module executes one or more safety functions, as shown in the following block diagram:

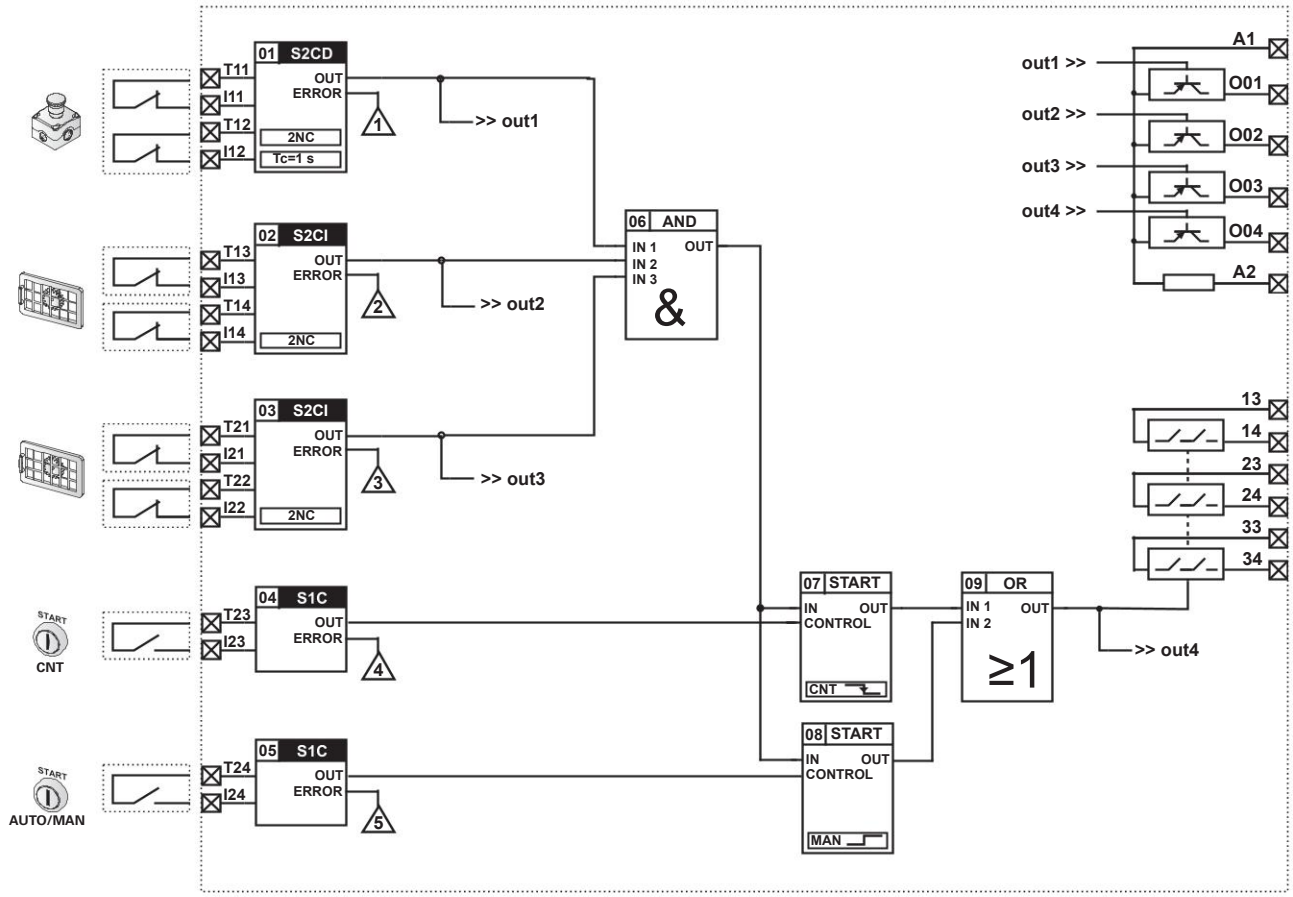

CS MF202M0-P2 pre-programmed module

Product code
CS MF202M0-P2

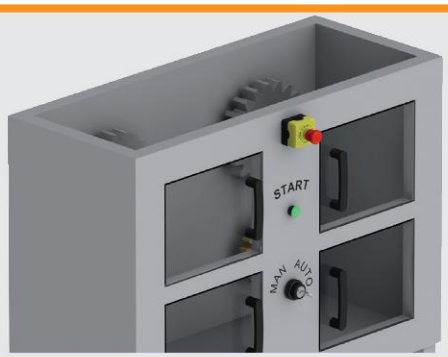

Main functions
- Monitoring of 4 guards
- 1 bypass selector
- 1 emergency stop
- Automatic start or monitored manual start
- General enabling signal

Outputs
- 4 PNP safety outputs
- 4 PNP signalling outputs

Technical data: see CS MP202M0
Dimensions, cable cross sections, terminal tightening torque: page 136, design C
Internal wiring diagram: page 138
Terminal layout: page 138

Application program: P2

The application program stored in the module executes one or more safety functions, as shown in the following block diagram:

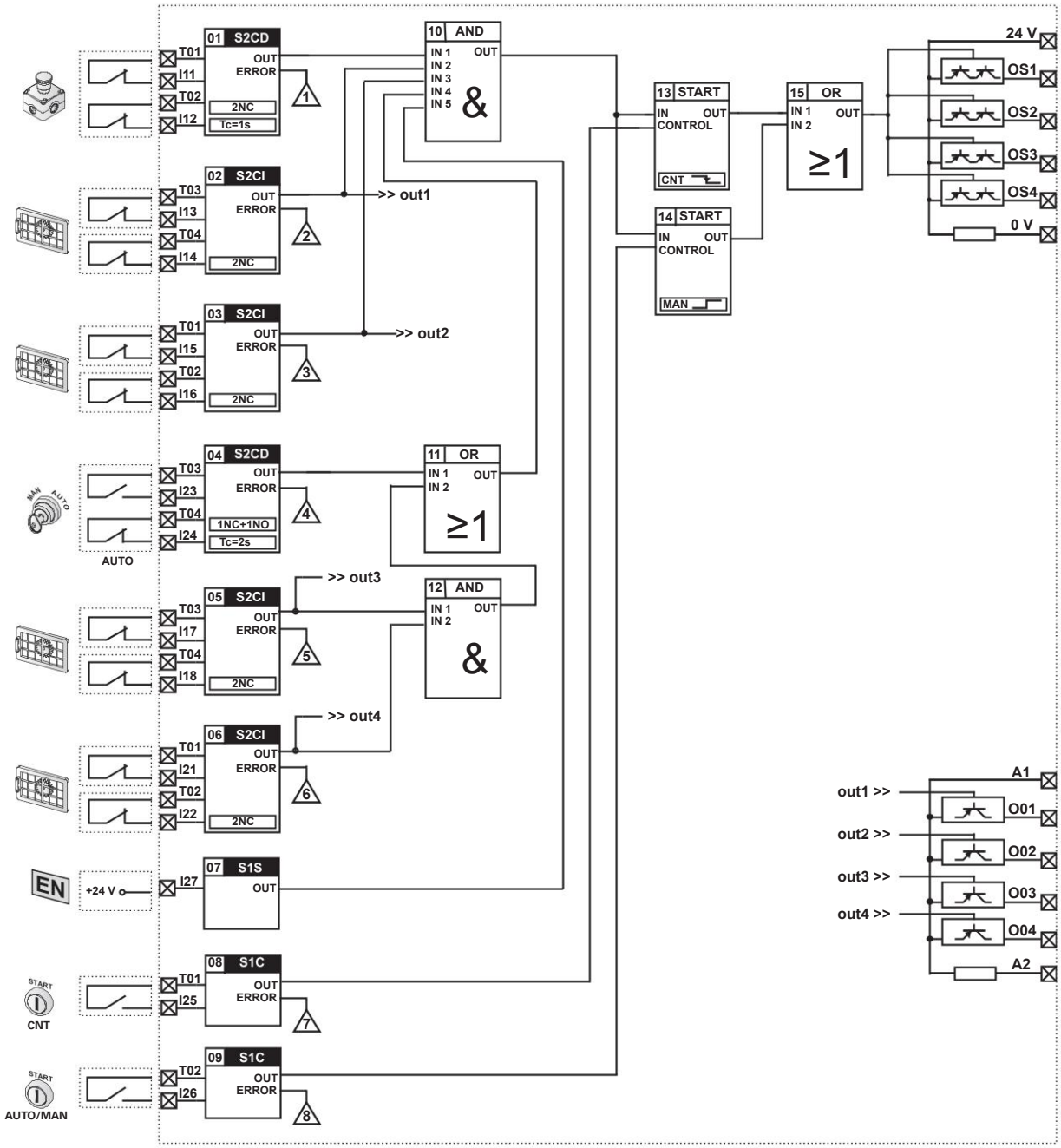

CS MF202M0-P3 pre-programmed module

Product code
CS MF202M0-P3

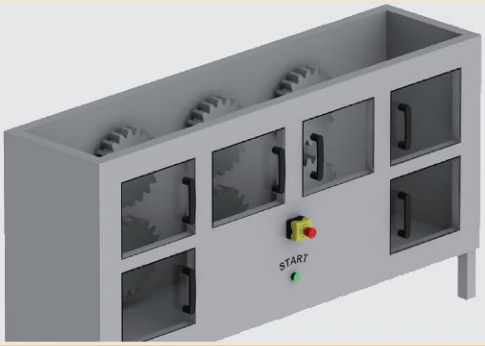

Main functions
- Monitoring of 6 guards (2NC contacts)
- 1 emergency stop
- Automatic start or monitored manual start

Outputs
- 4 PNP safety outputs
- 4 PNP signalling outputs

Technical data: see CS MP202M0
Dimensions, cable cross sections, terminal tightening torque: page 136, design C
Internal wiring diagram: page 138
Terminal layout: page 138

Application program: P3

The application program stored in the module executes one or more safety functions, as shown in the following block diagram:

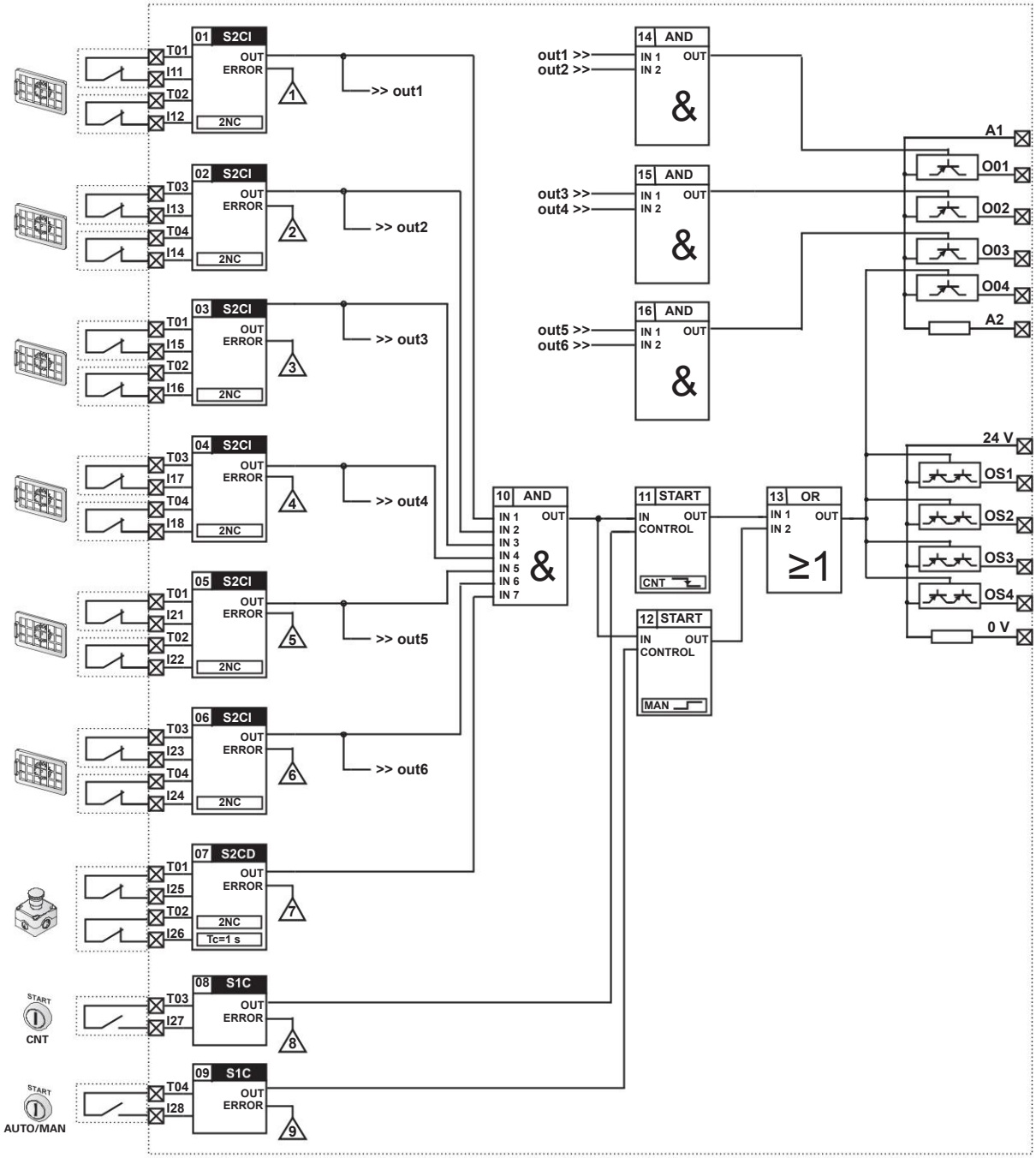

CS MF202M0-P4 pre-programmed module

Product code
CS MF202M0-P4

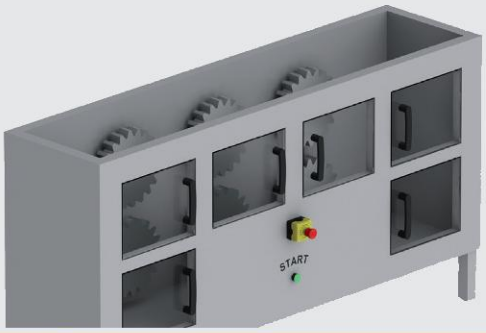

Main functions
- Monitoring of 6 guards (1NC+1NO contacts)
- 1 emergency stop
- Automatic start or monitored manual start

Outputs
- 4 PNP safety outputs
- 4 PNP signalling outputs

Technical data: see CS MP202M0
Dimensions, cable cross sections, terminal tightening torque: page 136, design C
Internal wiring diagram: page 138
Terminal layout: page 138

Application program: P4

The application program stored in the module executes one or more safety functions, as shown in the following block diagram:

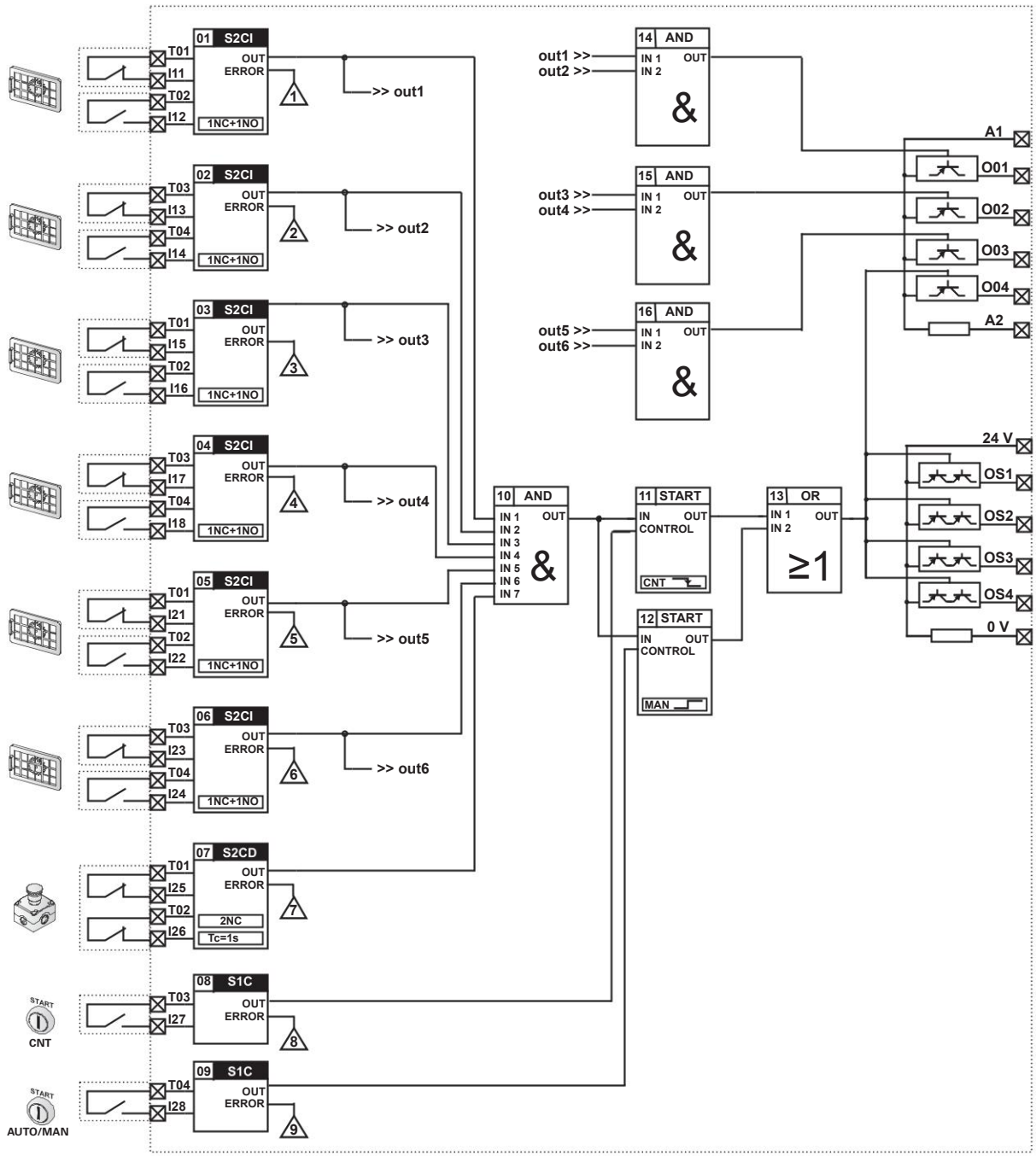

CS MF202M0-P5 pre-programmed module

Product code
CS MF202M0-P5

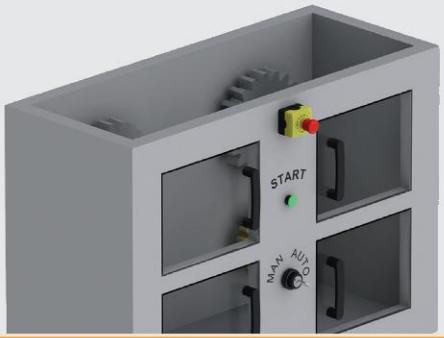

Main functions
- Monitoring of 4 guards with independent outputs
- 1 bypass selector
- 1 emergency stop
- Automatic start or monitored manual start
- General enabling signal

Outputs
- 4 PNP safety outputs
- 4 PNP signalling outputs

Technical data: see CS MP202M0
Dimensions, cable cross sections, terminal tightening torque: page 136, design C
Internal wiring diagram: page 138
Terminal layout: page 138

Application program: P5

The application program stored in the module executes one or more safety functions, as shown in the following block diagram:

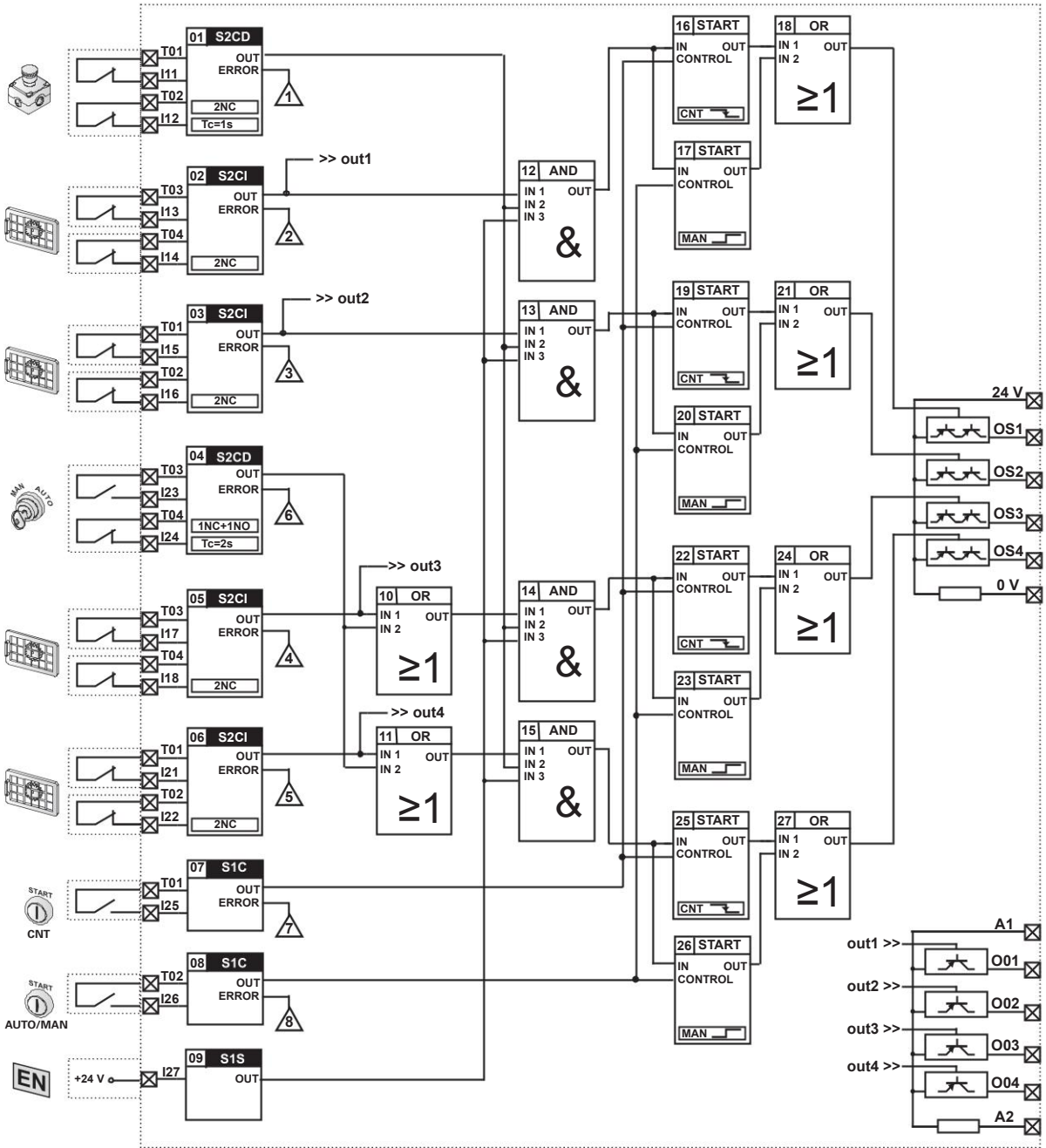

CS MF202M0-P6 pre-programmed module

Product code
CS MF202M0-P6

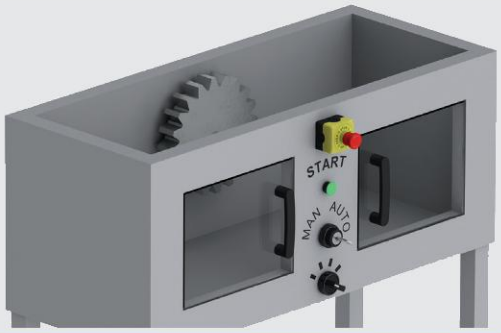

Main functions
- Monitoring of 2 guards
- 1 bypass
- 1 emergency stop
- Automatic start or monitored manual start
- General enabling signal
- Selectable On/Off delay
- Selector switch with 4 times

Outputs
- Three instantaneous outputs and one delayed PNP safety output
- 4 PNP signalling outputs

Technical data: see CS MP202M0
Dimensions, cable cross sections, terminal tightening torque: page 136, design C
Internal wiring diagram: page 138
Terminal layout: page 138

Application program: P6

The application program stored in the module executes one or more safety functions, as shown in the following block diagram:

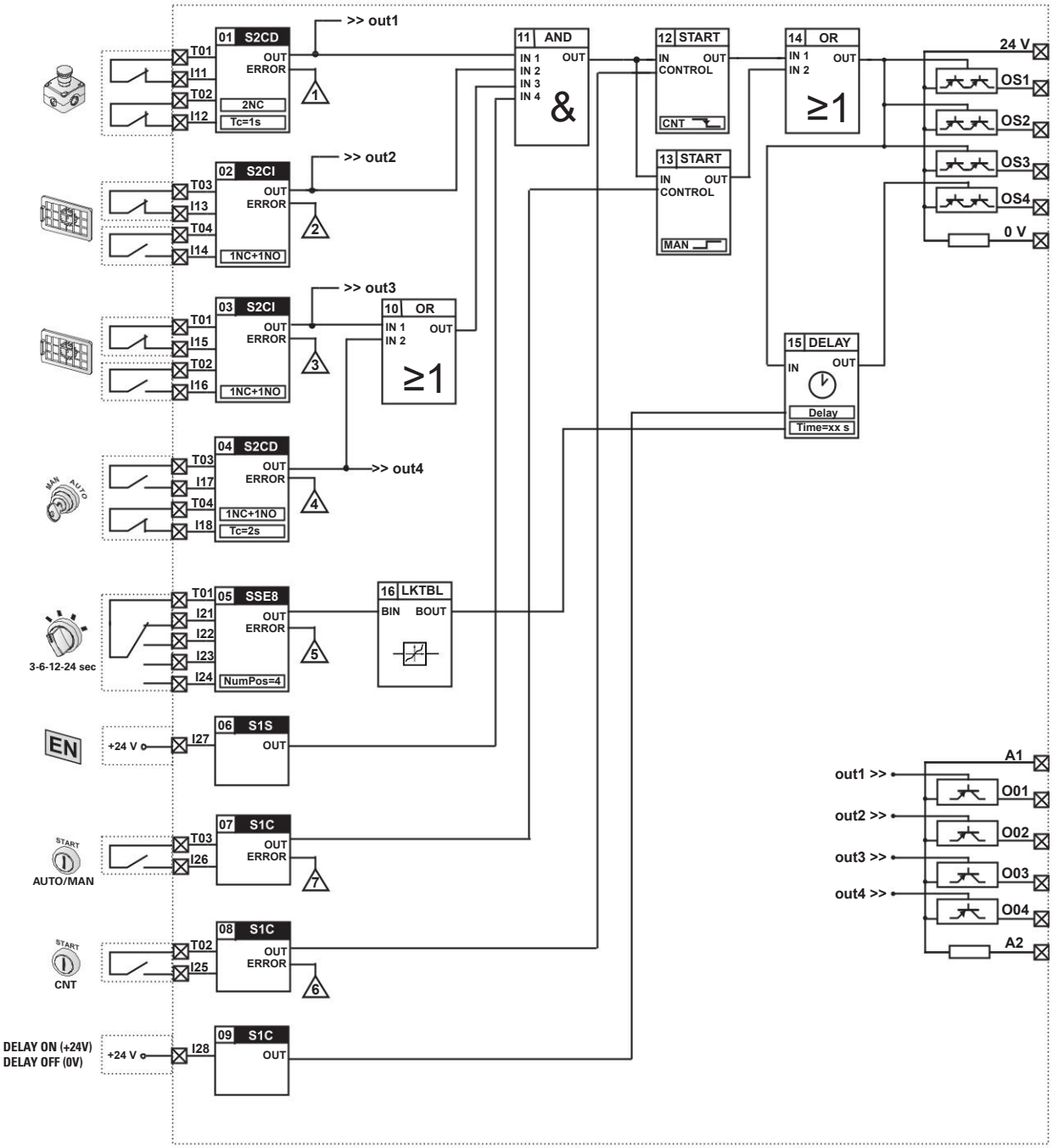

CS MF202M0-P7 pre-programmed module

Product code
CS MF202M0-P7

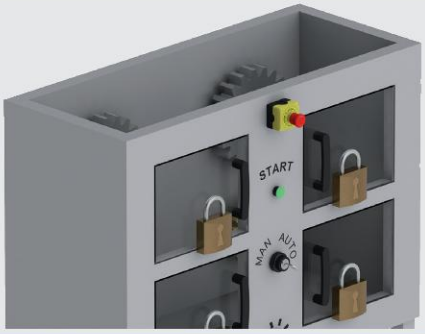

Main functions
- Monitoring of 4 guards with switches with guard locking, operating principle "D" (guard locked if solenoid is de-energised)
- 1 emergency stop
- Monitored start

Outputs
- 2 instantaneous outputs and 2 delayed PNP safety outputs with selector switch with 4 times
- 4 PNP signalling outputs
- OS4 output for door locking control

Technical data: see CS MP202M0
Dimensions, cable cross sections, terminal tightening torque: page 136, design C
Internal wiring diagram: page 138
Terminal layout: page 138

Application program: P7

The application program stored in the module executes one or more safety functions, as shown in the following block diagram:

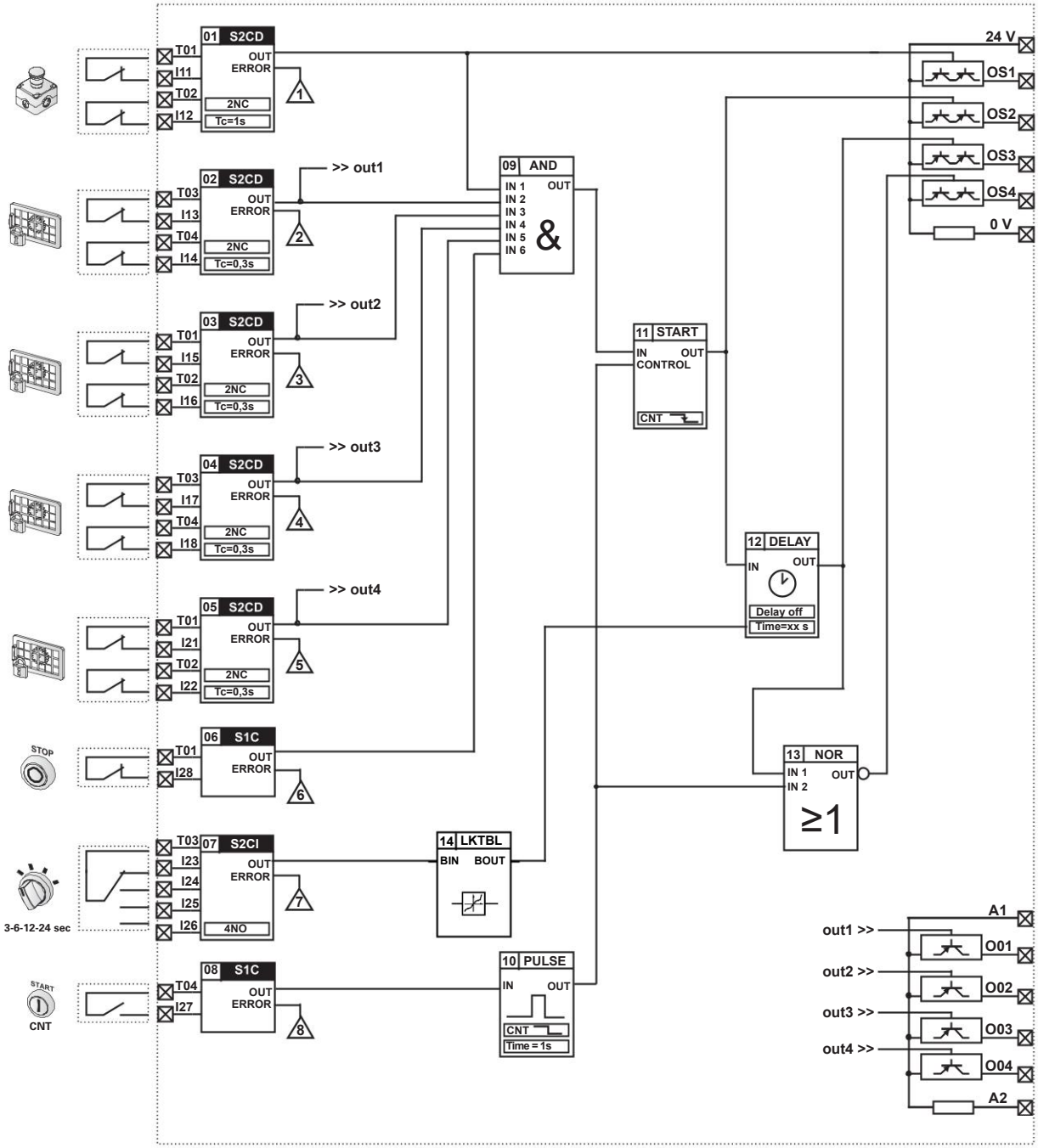

CS MF202M0-P8 pre-programmed module

Product code
CS MF202M0-P8

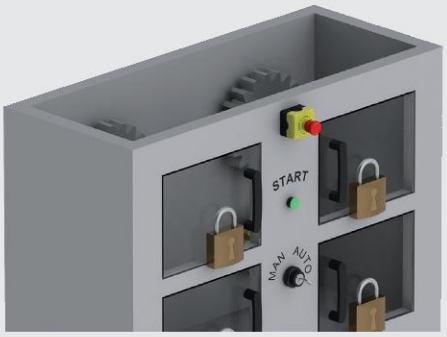

Main functions
- Monitoring of 4 guards with switches with guard locking, operating principle "E" (guard locked if solenoid is energised)
- 1 emergency stop
- Monitored start

Outputs
- 2 instantaneous outputs and 2 delayed PNP safety outputs with selector switch with 4 times
- 4 PNP signalling outputs
- OS4 output for door locking control

Technical data: see CS MP202M0
Dimensions, cable cross sections, terminal tightening torque: page 136, design C
Internal wiring diagram: page 138
Terminal layout: page 138

Application program: P8

The application program stored in the module executes one or more safety functions, as shown in the following block diagram:

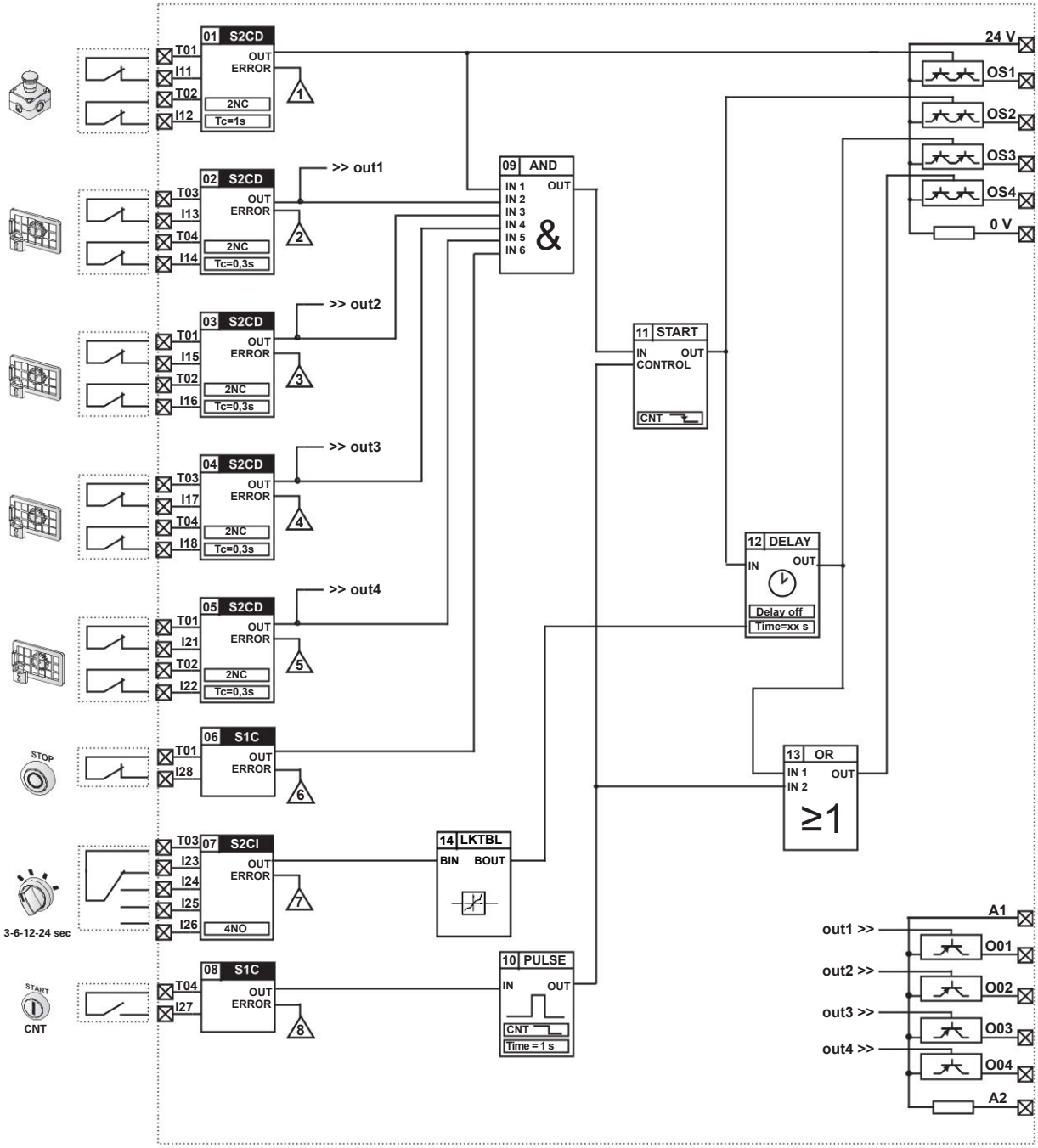

CS MF204M0-P10 pre-programmed module

Product code
CS MF204M0-P10

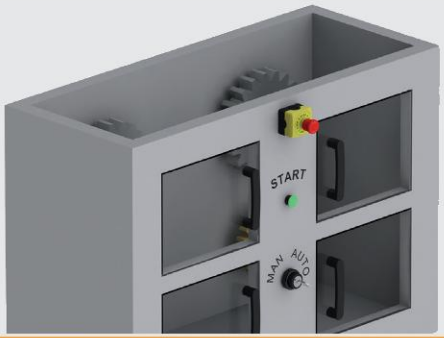

Main functions
- Monitoring of 4 guards in AND (OSSD outputs)
- 1 emergency stop
- Automatic start or monitored manual start

Outputs
- 3NO safety outputs
- 4 PNP signalling outputs

Technical data: see CS MP204M0
Dimensions, cable cross sections, terminal tightening torque: page 136, design C
Internal wiring diagram: page 138
Terminal layout: page 138

Application program: P10

The application program stored in the module executes one or more safety functions, as shown in the following block diagram:

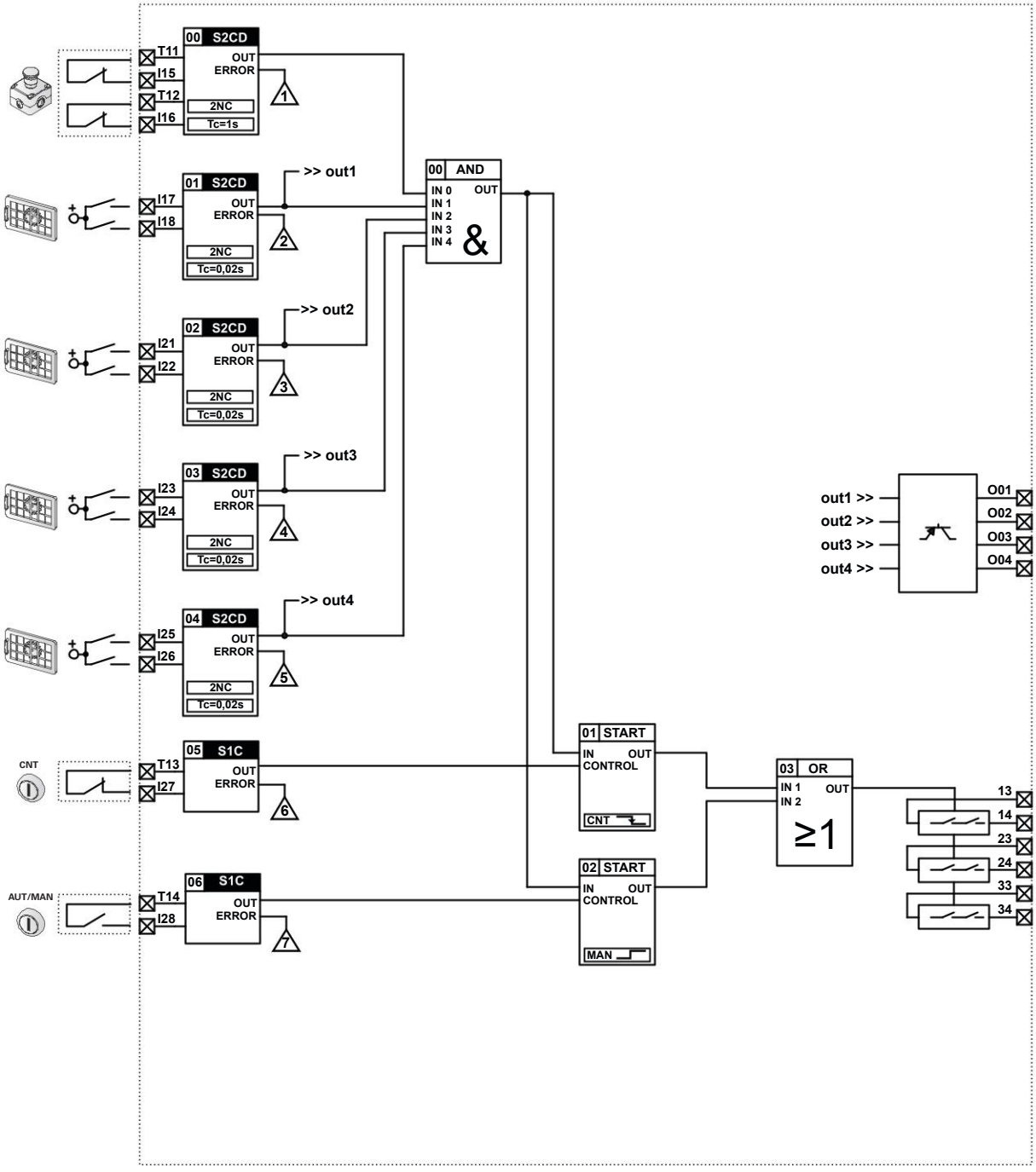

Notes

Notes: The positions of the contacts shown in the diagram are shown only as examples, and they refer to expected working conditions, with machinery in operation, guards closed, and safety devices not activated. For further explanations, please see documentation relating to each specific safety function (page 399).

Legend

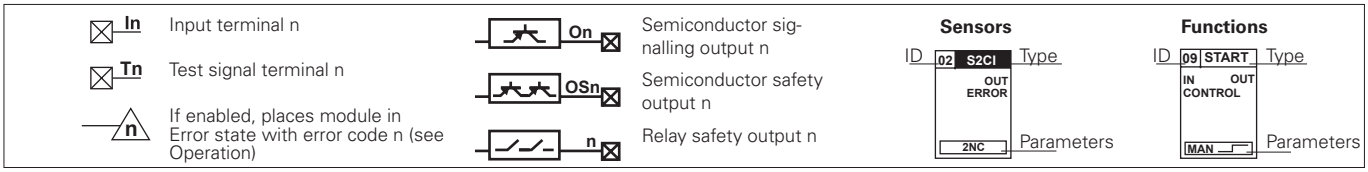

Definitions

Application program: The internal software component of this module which is aimed at the application.
"Power On" state: The device state, which lasts from the time it is switched on until the end of the internal controls.
"Run" state: The device state on completion of the "Power-On" phase (if no errors have been detected) in which the Application program is run.
"Error" state: The device state when a fault is detected. In this state, the module switches to the safe state, i.e., all safety outputs are open.
Fault: A fault can be internal or external to the safety module. Internal faults are autonomously detected by the module thanks to its redundant and self-monitored structure. An external fault can be detected by the application program. It follows that the definition of external fault is strictly dependent on the application (see note A).

Operation

When supplied with power, the module enters the Power-On state and runs an internal self-diagnosis. In this phase, the two processor LEDs (P1, P2) remain illuminated red for about 1 second. If the internal tests are completed without malfunction, the two LEDs are switched off, the module enters the Run state, and runs the application program. If the start tests are not passed, the module enters the Error state and the malfunction is indicated by the processor LEDs remaining illuminated red.
The green LEDs relating to the power supply and the module inputs are not controlled by processors, and they immediately begin indicating the states of the respective inputs/outputs.
When the module is in the RUN state, and no faults are detected, the two LEDs (P1, P2) remain switched off.
In the Run state, the module can detect faults external to the module, for example caused by short circuits, or invalid input states (see note A). Depending on the fault type detected, the application program may place the module in error state, to indicate the malfunction. In this case, the application program can communicate an error code by making the LEDs (P1, P2) flash in sequence.
During the Run state, simultaneously with application program execution, the module constantly runs a series of internal tests to check for correct hardware operation. If a malfunction is detected, the module state changes to Error.
Once in Error state, the module is placed in a safe condition, that is with all the safety outputs open; the application program is no longer evaluated, and neither are the system inputs. Furthermore, the semiconductor signalling outputs are left unaltered (changes in inputs do not affect them) at the value imposed by the application program before entering the error state. To reset the module, just switch it off for the required duration (see technical data) and then switch it on again.

Note A: A short circuit is not always a fault. For example, in the case of an ordinary push button for emergency stops equipped with two NC contacts, contact opening is the signal to be evaluated and a short circuit between the two contacts is a fault. In contrast, in the case of a safety mat with 4-wire technology, the opposite is true, i.e. a short circuit between the wires is the signal to be evaluated whereas wire interruption is a fault.

Fault signalling

LED PWR		LED P1 and P2		Possible fault cause
Off	○	Off	○	No power supply, incorrect connections, power wires cut, external fuses broken. Module fault.
Green	●	Off	○	Normal operation.
Green	●	Red	●	Non-restorable fault. Recommended action: Send module for repair.
Green	●	Red x 1 Blue x 1	●))) 1 ●))) 1	Restorable fault: Overcurrent on Tx or Ox outputs. Recommended action: Disconnect the semiconductor signalling outputs (Ox) and the test outputs (Tx) to check whether an external short circuit is present.
Green	●	Red x 1 Blue x 2	●))) 1 ●))) 2	Restorable fault. Problem detected on OSx (short circuit towards earth or positive pole, or else short circuit between two OSx). Suggested action: Disconnect the safety outputs to check if there are any problems on the external connections of the OSx outputs.
Green	●	Red x 1 Blue x 3	●))) 1 ●))) 3	Restorable fault. Module temperature outside the limits. Recommended action: Restore module temperature to within permissible limits.
Green	●	Red x 1 Blue x 4	●))) 1 ●))) 4	Restorable fault: No power on 24V-0V terminals. Recommended action: Check the electrical connections.
Green	●	Blue x N	●))) N	Module entered Error state at the request of the application program. Error code N. Typically due to incorrect input conditions (external short circuits, status not permitted). Recommended action: Disconnect the inputs to find any short circuits. Check the documentation supplied with the application program for further details.

Quick description of the main safety functions (CS MF•••••)

SENSORS

Sensor	S1C	Monitoring of one contact
Outputs	OUT	The OUT output is active when the input is closed and there is no error
	ERROR	The ERROR output is active in the case where an electrical malfunction is detected in the input signal
Parameters	None	
Examples		Start button; Stop button; Simple contact

Sensor	S1S	Monitoring of one static signal
Outputs	OUT	The OUT output is active if 24 Vdc is applied to the input
Parameters	None	
Examples		Generic sensors with PNP output; Enabling signals

Sensor	S2CD	Monitoring of two dependent contacts
Outputs	OUT	The OUT output is active when both inputs are in normal or safety state and there is no error
	ERROR	The ERROR output is active in the case where simultaneity times are not respected, or in the case where an electrical malfunction is detected at the input signals
Parameters	2NC / 1NO+1NC	Contact position in normal or safety state
	Tc	Max. time of simultaneity in seconds
Examples		Emergency stop button; rope switch; switch with two connected contacts; mode selectors with two settings, changeover; two individual switches with a time dependency

Sensor	S2CI	Monitoring of two independent contacts
Outputs	OUT	The OUT output is active when both inputs are in normal or safety state and there is no error
	ERROR	The ERROR output is active in the case where an electrical malfunction is detected in the input signals
Parameters	2NC / 1NO+1NC	Contact position in normal or safety state
Examples		Two switches; Magnetic sensor

Sensor	SSE8	Mode selector with 2 to 8 positions
Outputs	OUT	The output gives a numerical value of 1 to 8 corresponding to the active input, 0 in case of error
	ERROR	The ERROR output is active if multiple inputs are active or if no input is active, or if an electrical failure is detected in the input signals
Parameters	NumPos	Number of input signals (2 to 8)
Examples		Mode selectors with a common contact and between 2 and 8 outputs

FUNCTIONS

Function	AND	AND logical function
Outputs	OUT	The OUT output is only active if all IN input signals are present

Function	DELAY	Delayed process activation/deactivation
Outputs	OUT	The OUT output is activated if a signal is present at the IN input with a delay of Td (parameter type Don) If the signal at the IN input drops out, the OUT output is deactivated with a delay of Td (parameter type Doff)
Parameters	Don / Doff	Delay type, Don (delay on) on activation or Doff (delay-off) on cut-off
	Td	Length of delay on activation or cut-off

Function	NOR	NOR logical function
Outputs	OUT	The OUT output is only active in the absence of all IN input signals

Function	OR	OR logical function
Outputs	OUT	The OUT output is only active if at least one IN input signal is present
Function	PULSE	Activation of a process for a short time
Outputs	OUT	The OUT output is activated on the IN signal falling edge and remains active for the time set by Tp
Parameters	Tp	Pulse duration

Function	START	Activation of a process
Outputs	OUT	The OUT output is activated by the edge (see parameters) of the CONTROL signal if the IN input signal is present. Thus, it remains active as long as the signal is present at IN
Parameters	MAN / CNT	MAN = activation on rising edge, CNT = activation on falling edge
Function	LKTBL	Lookup table; Conversion table between data of the same type
Outputs	BOUT	Converted data at output. Initial value = 0
Parameters	Number of data	Number of data present in the table

Disclaimer:
Subject to modifications without prior notice and errors excepted. The data given in this sheet are accurately checked and refer to typical mass production values. The device descriptions and its applications, the fields of application, the external control details, as well as information on installation and operation, are provided to the best of our knowledge. This does not in any way mean that the characteristics described may entail legal liabilities extending beyond the "General Terms of Sale", as stated in the Pizzato Elettrica general catalogue. The customers/user is required to read our information and recommendations as well as the pertinent technical provisions before using the products for his own purposes.

Dimensional drawings, housings features

Design A, housing width 22.5 mm

Connection data
Terminal tightening torque: 0.5 … 0.6 Nm
Cable cross section: 0.2 … 2.5 mm²
24…12 AWG

Installation
Snap-mounting on DIN rails

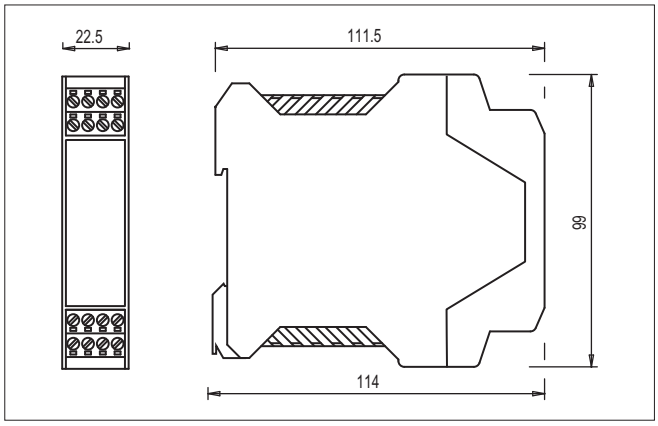

Connector with screw terminals

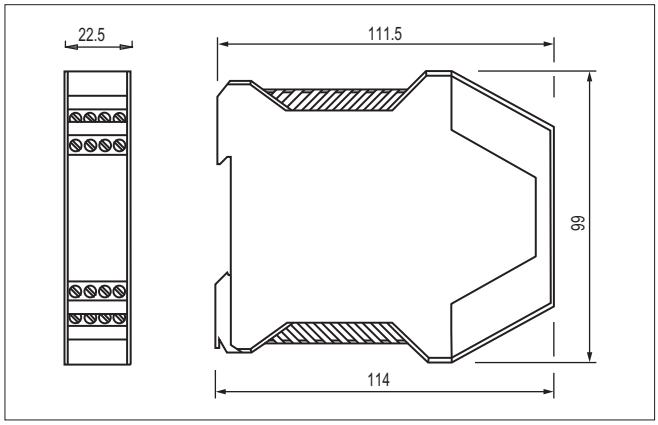

Screw terminals

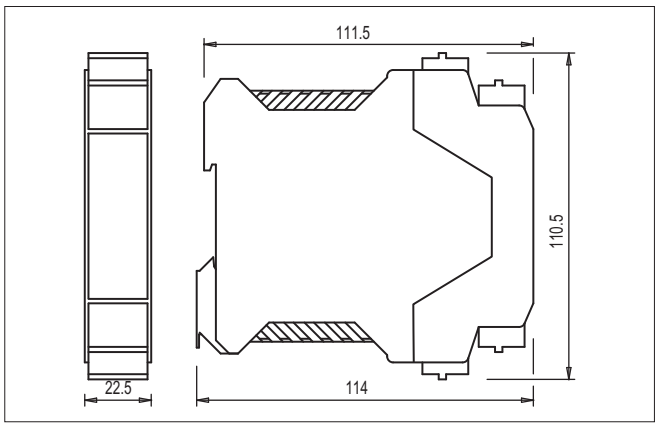

Connector with spring terminals

Design B, housing width 22.5 mm

Connection data
Terminal tightening torque: 0.5 … 0.6 Nm
Cable cross section: 0.2 … 2.5 mm²
24…12 AWG

Installation
Snap-mounting on DIN rails

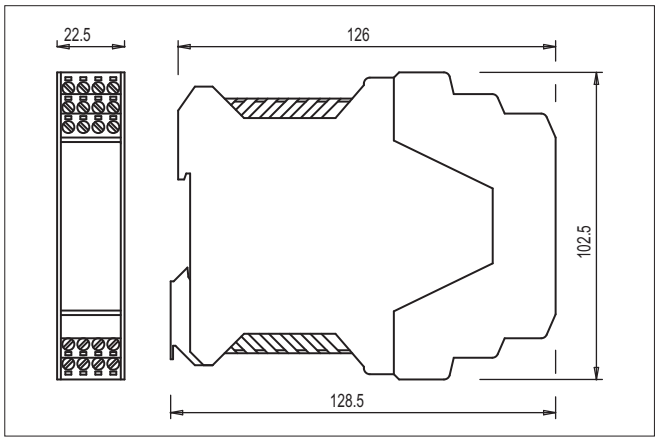

Connector with screw terminals

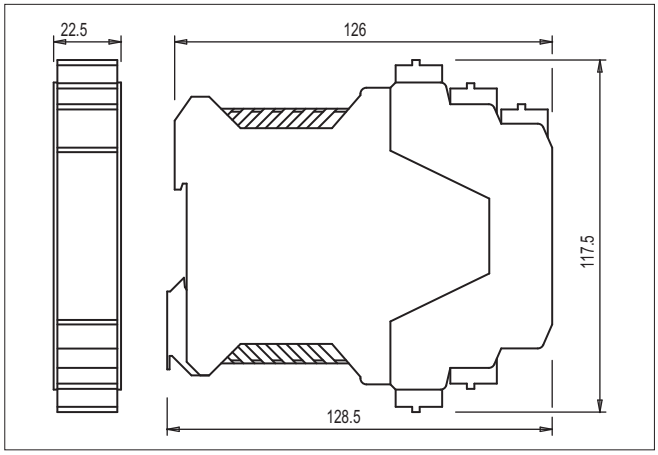

Connector with spring terminals

All values in the drawings are in mm

Design C, housing width 45 mm

Connection data
Terminal tightening torque: 0.5 … 0.6 Nm
Cable cross section: 0.2 … 2.5 mm²
24…12 AWG

Installation
Snap-mounting on DIN rails

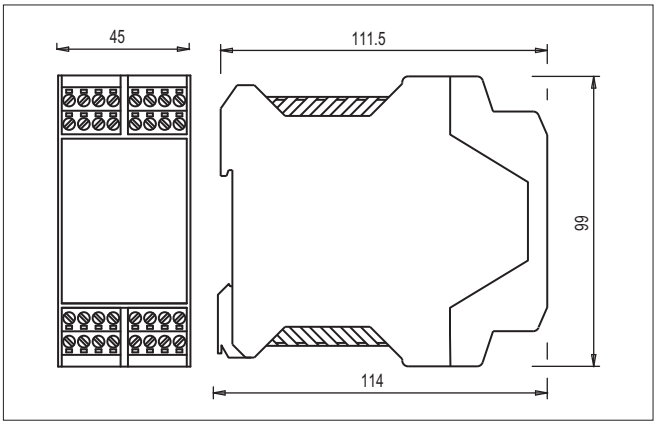

Connector with screw terminals

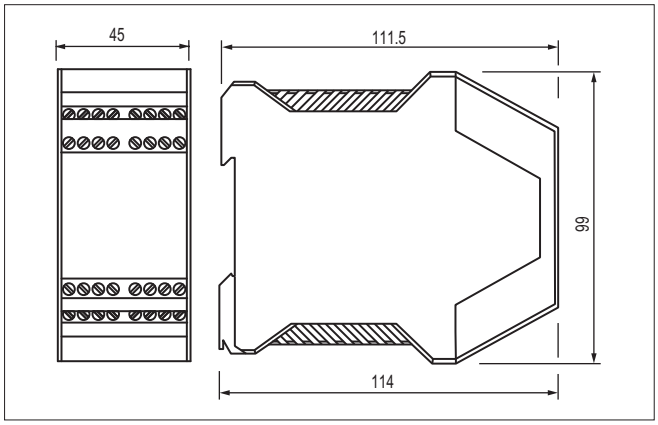

Screw terminals

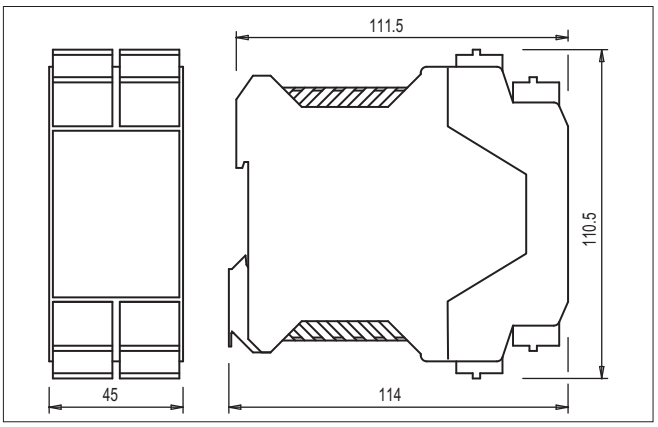

Connector with spring terminals

Design D, housing width 22.5 mm

Connection data
Terminal tightening torque: 0.5 … 0.6 Nm
Cable cross section: 0.2 … 2.5 mm²
24…12 AWG

Installation
Snap-mounting on DIN rails

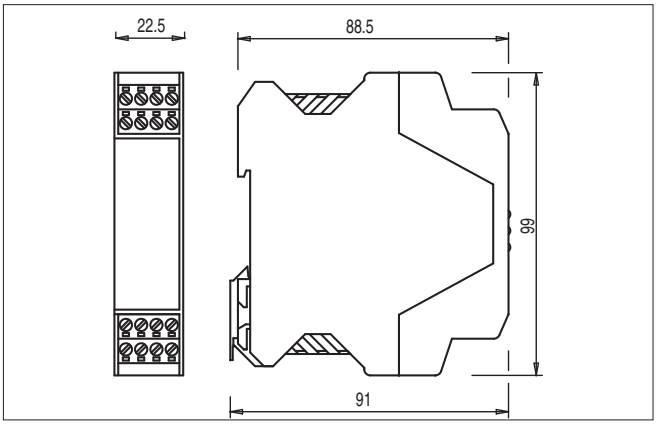

Connector with screw terminals

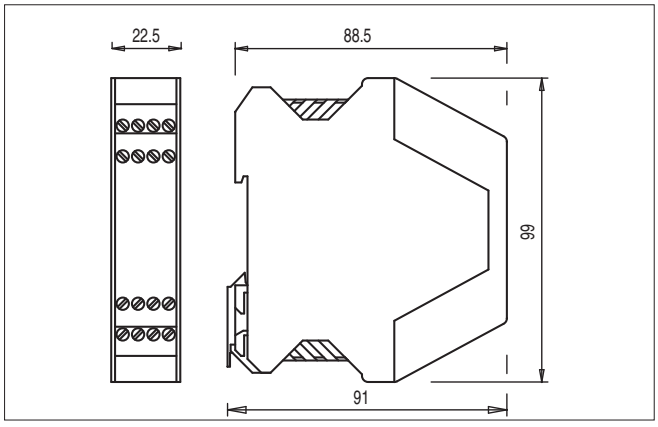

Screw terminals

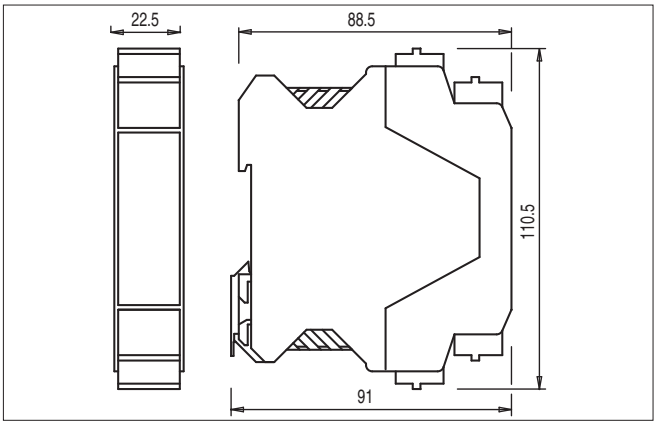

Connector with spring terminals

All values in the drawings are in mm

Design E, housing width 67.5 mm

Connection data

Terminal tightening torque:	0.5 … 0.6 Nm
Cable cross section:	0.2 … 2.5 mm²
	24…12 AWG

Installation
Snap-mounting on DIN rails

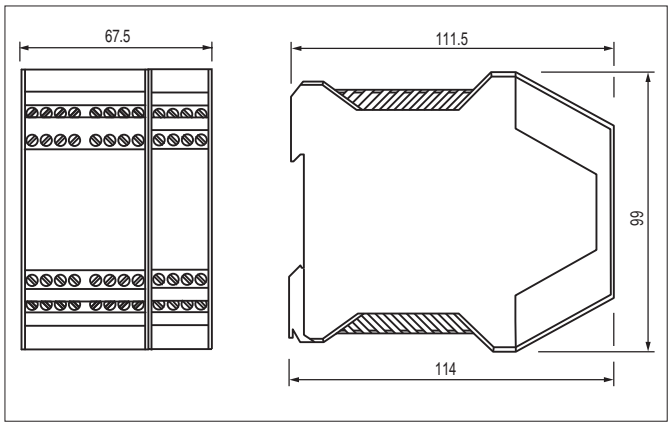

Screw terminals

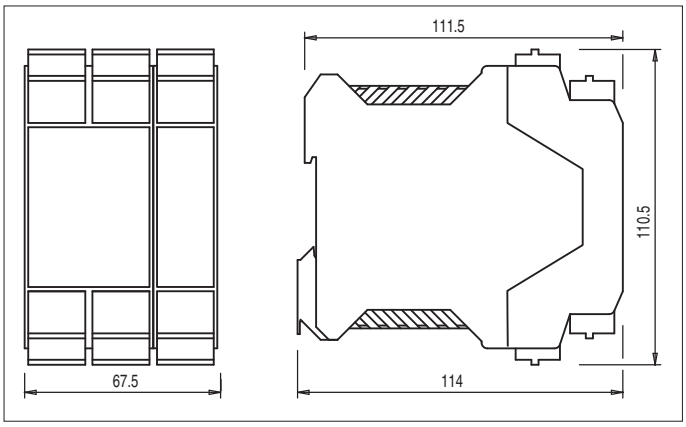

Connector with spring terminals

Design F, housing width 90 mm

Connection data

Terminal tightening torque:	0.5 … 0.6 Nm
Cable cross section:	0.2 … 2.5 mm²
	24…12 AWG

Installation
Snap-mounting on DIN rails

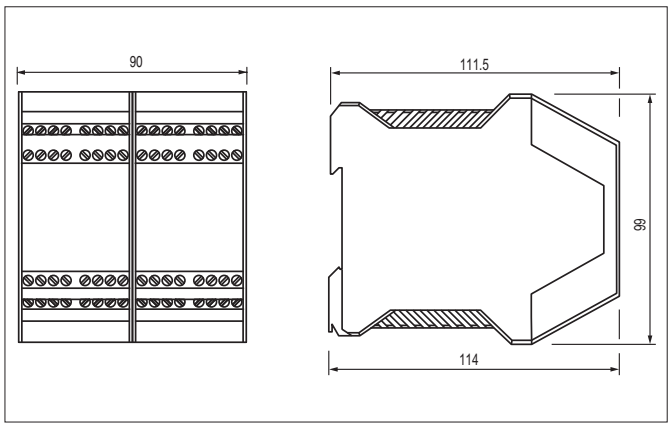

Screw terminals

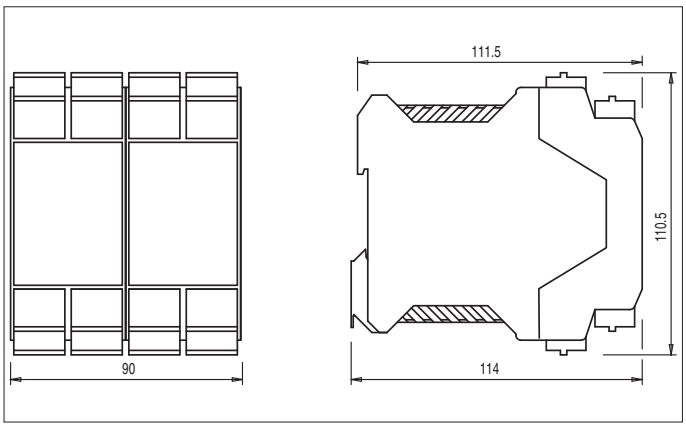

Connector with spring terminals

All values in the drawings are in mm

Pin assignment CS MF series

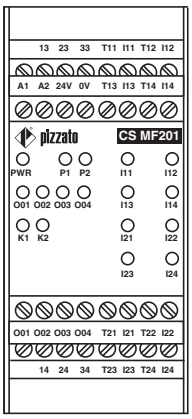

CS MF201

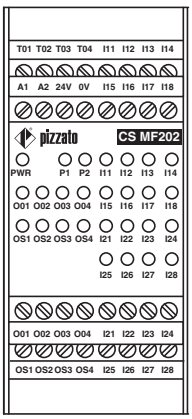

CS MF202

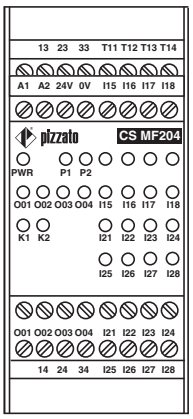

CS MF204

CS MF series internal wiring diagram

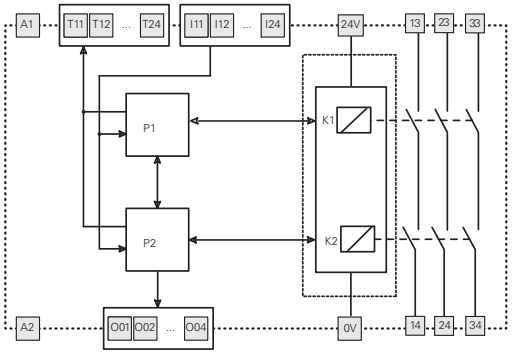

CS MF201

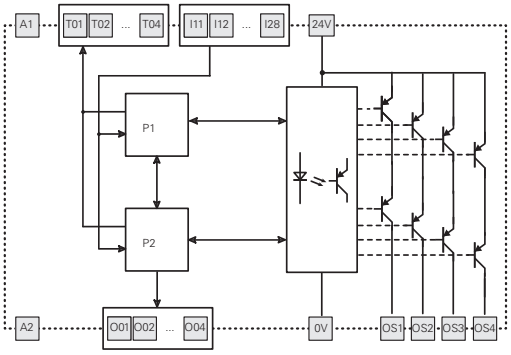

CS MF202

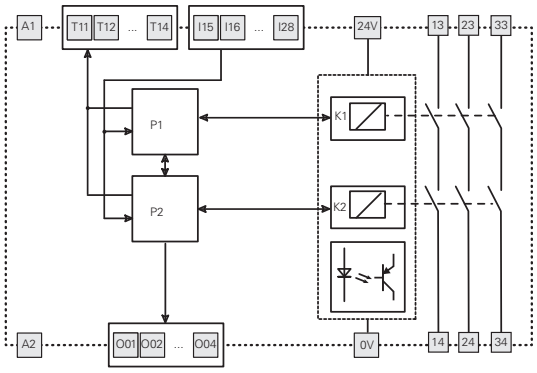

CS MF204

1- Introduction

The purpose of this section is to provide the machine manufacturer with a quick overview of a number of standards related to machine safety, to clarify some basic terms and to provide some application examples. This brief guide only covers aspects related to the functional safety of the machine, i.e., all measures that must be taken to protect the operating personnel from the hazards arising from the operation of the machine, as well as the project planning and selection of the appropriate interlocking devices for the given guard.
The machine designer himself must identify risks that are posed by other hazards, such as live parts, pressurised containers, explosive atmospheres, etc. These risks are not dealt with in this guideline.
Pizzato Elettrica prepared this document to the best of its knowledge, taking into consideration the standards, interpretations and existing technologies. The examples provided here must always be considered by the end customer with respect to the latest state of technology and standardisation. Pizzato Elettrica accepts no responsibility for the examples provided here and does not exclude the possibility of unintentional errors or inaccuracies.

2 - Design in safety. Structure of the European standards

To freely market any type of device or machine in the countries of the European Community, they must comply with the provisions of the EU directives. They establish the general principles for ensuring that manufacturers place products on the market that are not hazardous to the operating personnel. The vast range of products pose many different hazards and, over time, has led to the release of various directives. As an example, consider the Low Voltage Directive 2014/35/EU, the Equipment for Explosive Atmospheres (ATEX) Directive 2014/34/EU, the Electromagnetic Compatibility Directive 2014/30/EU, etc. The hazards that arise from the operation of machinery are described in the Machinery Directive 2006/42/EC.
Conformity with the directives is certified by the Declaration of Conformity issued by the manufacturer and by the application of the CE marking on the machine.

For the assessment of risks posed by a machine and for the realisation of the safety systems for protecting the operating personnel from those risks, the European standardisation organisations CEN and CENELEC have issued a series of standards which translate the contents of the directives into technical requirements. The standards published in the Official Journal of the European Union are harmonised. The manufacturer is to verify conformity with the applied and listed standards.

The machine safety standards are divided into three types: A, B and C.
Type A standards: Standards that cover basic concepts and general principles for design in order to achieve safety in the design of machinery.
Type B standards: Standards that deal with one or more safety aspects and are divided into the following standards:
- B1: Standards on particular safety aspects (e.g. safety distances, temperature, noise, etc.)
- B2: Standards on safeguards (e.g. two-hand controls, interlocking devices, guards, etc.)

Type C standards: Standards that deal with detailed safety requirements for a particular group of machines (e.g. hydraulic presses, injection moulding machines, etc.)

The system or machine manufacturer must therefore determine whether the product is covered by a type C standard. If this is the case, this standard specifies the safety requirements; otherwise, the type B standards shall apply for any specific aspect or device of the product. In the absence of specifications, the manufacturer shall follow the general guidelines stated in the type A standards.

TYPE A STANDARDS
For example:

EN ISO 12100. Safety of machinery - General principles for design - Risk assessment and risk reduction.

TYPE B1 STANDARDS
For example:

EN IEC 62061. Safety of machinery - Functional safety of safety-related electrical, electronic and programmable electronic control systems
EN ISO 13849-1 e -2. Safety-related parts of control systems

TYPE B2 STANDARDS
For example:

EN ISO 13851. Two-hand control devices
EN ISO 13850. Emergency stop
EN ISO 14119. Interlocking devices associated with guards
EN 60204-1. Electrical equipment of machines
EN 60947-5-1. Electromechanical control circuit devices

TYPE C STANDARDS
For example:

EN ISO 20430. Plastics and rubber machines - Injection moulding machines
EN 415-1. Safety of packaging machines
EN ISO 16092-1 and EN ISO 16092-2. Mechanical presses
EN ISO 16092-1 and EN ISO 16092-3. Hydraulic presses
EN ISO 19085-6. Safety of wood-working machines – One side moulding machines with rotating tool – Part 1: Single spindle vertical moulding machines

3 - Designing safe machines. Risk analysis

The first step in producing a safe machine is to identify the possible hazards to which the operators of a machine are exposed. The identification and classification of the hazards allows the risk for the operator or the combination of the probability of a hazard and the possible injury to be determined.

The methodology for risk analysis and evaluation and the procedure for the elimination/reduction of risks is defined by standard EN ISO 12100. This standard introduces a cyclic analysis model: starting with the initial objectives, the risk analysis and the various possibilities for reducing these risks are repeatedly evaluated until the initial objective is met.

The model introduced in this standard specifies that one proceed as follows after performing a risk analysis to reduce or eliminate risks:
1) Elimination of risks at their source through the use of intrinsically safe design principles and the structural set-up of the systems;
2) Risk reduction through safeguarding and monitoring systems;
3) Identification of residual risks though signalling and by informing the operating personnel.

Since every machine has hazards and because it is not possible to eliminate all possible risks, the objective is to reduce the residual risks to an acceptable level.

If a risk is reduced by means of a monitoring system, standard EN ISO 13849-1, which provides an evaluation model for the quality of this system, comes into play. If a given level is specified for a risk, it is possible to use a safety function of equal or higher level.

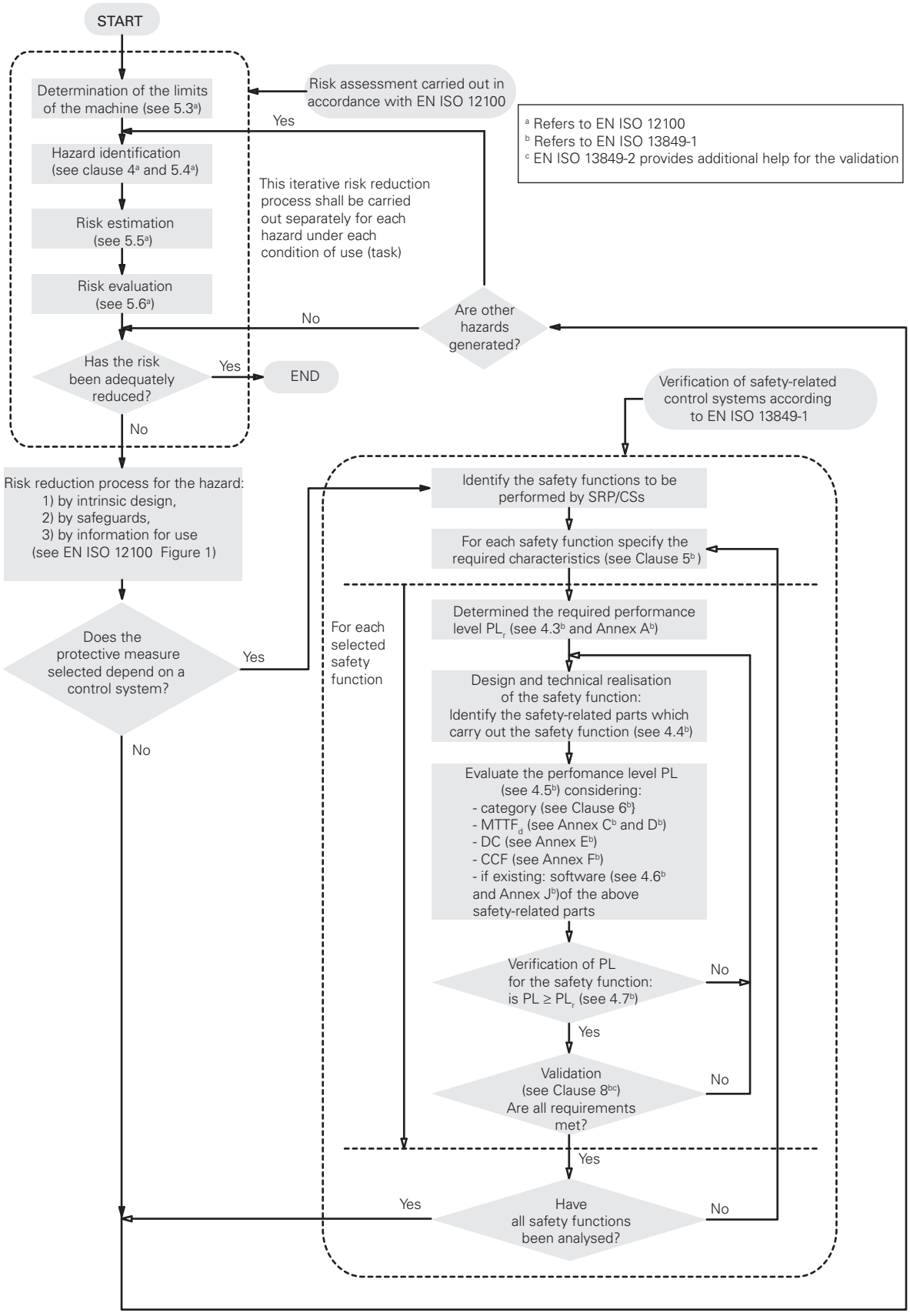

Note: This diagram was created by combining figures 1 and 3 of standard EN 13849-1. The texts in the diagram are not identical to those in the standard.

4 - Positive opening, redundancy, diversification and self-monitoring

Positive mode and negative mode.
According to the standard EN ISO 12100, if a moving mechanical component inevitably moves another component along with it, either by direct contact or via rigid elements, these components are said to be connected in the **positive** mode. Instead, if the movement of a mechanical component simply allows another element to move freely, without using direct force (for example by gravity force, spring effect, etc.), that connection is said to be connected in the **negative** mode.

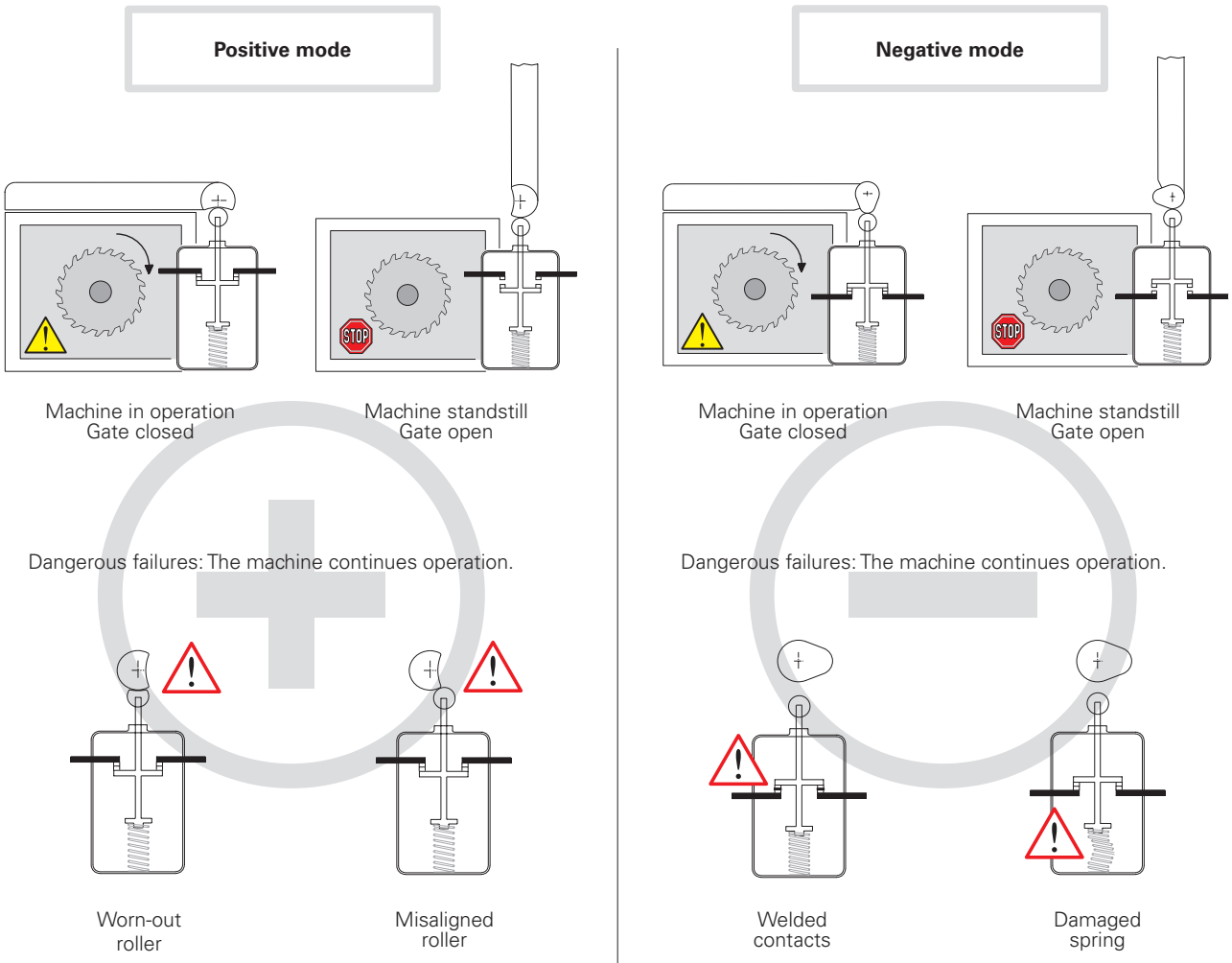

With positive mode, preventive maintenance can be performed, thereby avoiding the dangerous failures described above. With negative mode, on the other hand, failures can occur within the switch and are therefore difficult to detect.
In the event of an internal failure (welded contacts or a damaged spring), the contacts will still open in positive mode in spite of the damage and the machine will be stopped.

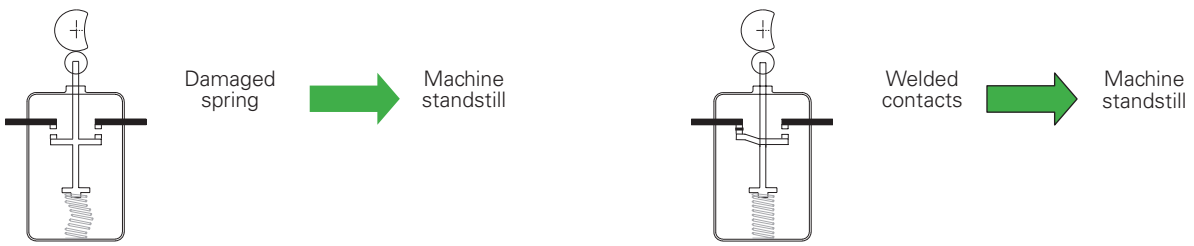

Use of switches in safety applications
If only one switch is used in a safety application, the switch must be actuated in positive mode. In order to be used for safety applications, the opening contact (normally closed) must be with "**positive opening**". All switches with the symbol ⊖ are provided with NC contacts with positive opening.

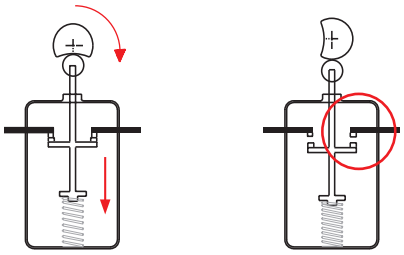

No flexible connection between the moving contacts and the actuator on which the actuating force is exerted.

In case of two or more switches, they should operate in opposite modes, for example:
- The first with an NC contact (normally closed contact), actuated by the guard in positive mode.
- The other with an NO contact (normally open contact), actuated by the guard in negative mode.

This is a common practice, though it does not exclude the possible use of two switches that are actuated in positive mode (see diversification).

Diversification
In redundant systems, safety is increased through **diversification**. This can be obtained by using two switches with different design and/or technology; failures with the same cause can thereby be prevented. Examples for diversification include: the use of one switch with positive actuation and one switch without positive actuation, the use of one switch with mechanical actuation and one switch without mechanical actuation (e.g., electronic sensor) or the use of two switches with mechanical, positive actuation but with different types of actuation (e.g., an FR 693-M2 key switch and a switch with FR 1896-M2 hinge pin).

Redundancy
Redundancy implies the use of more than one device or system to make sure that, in case of a failure in one device, there is another one available to perform the required safety functions. If the first failure is not detected, an additional failure may lead to the loss of the safety function.

Self-monitoring
Self-monitoring consists in an automatic control performed to check the functioning of all devices involved in the machine working-cycle. This way the next working cycle can be either accepted or rejected.

Redundancy and self-monitoring
Combining **redundancy** and **self-monitoring** in the same system makes sure that a first failure in the safety circuit does not lead to the loss of safety functions. This first failure will be detected at the next re-start or, in any case, before a second failure which may lead to the loss of the safety function.

5- Design and selection of interlocking devices associated with guards (standard EN ISO 14119)

In September 2024, the third edition of standard ISO 14119 "Interlocking devices associated with guards – Principles for design and selection" was published. This new edition introduces several interesting developments, particularly regarding the classification of devices and non-detachable fixing methods.

NEW ISO 14119:2024

The standard is intended for manufacturers of interlocking devices as well as machine manufacturers (and integrators) and describes the requirements on the devices and their correct installation.
The new standard provides clarification to a number of questions that are not always clear cut and considers the latest technologies used in the design of interlocking devices, defines a number of parameters (actuator type and coding level) and describes the procedure for correct installation with the goal of minimizing the defeat possibilities of the interlocking devices.
The standard also considers other aspects related to interlocking devices (e.g. guard locking principles, electromagnetic guard locking, auxiliary release, escape and emergency release, etc.) which are not described here.

Coding level of the actuators

The standard includes the definition of a coded actuator and the classification of the coding levels:

- **coded actuator** – actuator which was specially designed for use with a specific interlocking device;
- **Actuator with low coding level** – coded actuator for which 1 to 9 variations in code are available (e.g. the SR magnetic switch series or the safety switches with separate actuator and mechanical detection FS, FG, FR, FD…);
- **actuator with medium coding level** – coded actuator for which 10 to 1000 variations in code are available;
- **Actuator with high coding level** – coded actuator for which more than 1000 variations are available. (e.g. the ST series sensors with RFID technology or the interlocking devices of the NG, NS and NX series with RFID technology and guard locking).

Types of interlocking devices

The third edition of standard ISO 14119 introduces a new type of interlocking device, type 5 for trapped-key devices, in addition to those already included in the second edition:

- **Type 1 interlocking device** – interlocking device that is mechanically actuated by an uncoded actuator (e.g. HP series hinged interlocking devices).
- **Type 2 interlocking device** – interlocking device that is mechanically actuated by a coded actuator (e.g. safety switches with separate actuator of the FR, FS, FG, … series).
- **Type 3 interlocking device** – interlocking device that is contactlessly actuated by an uncoded actuator.
- **Type 4 interlocking device** – interlocking device that is contactlessly actuated by a coded actuator(e.g. ST series safety sensors with RFID technology and NG, NS and NX series safety switches with RFID technology).
- **Type 5 interlocking device** – Trapped-key interlocking device, which performs its function by locking or releasing one or more keys in a determined trapped-key interlocking system.

Type	Actuation principle	Actuator	Guard monitoring	Actuator examples		
				Actuation principle	Actuator	Annex
Type 1	Mechanical	Uncoded	Direct	Physical contact/force	Rotary cam	A.1
					Linear cam	A.2, A.4
					Hinge	A.3
Type 2	Mechanical	Coded	Direct	Physical contact/force	Key-actuated	B.1
Type 3	Non-contact	Uncoded	Direct	Magnetic	Magnet, solenoid	C.1
				Inductive	Ferrous metal	
				Capacitive	Any suitable object	
				Ultrasonic	Any suitable object	
				Optic	Any suitable object	
Type 4	Non-contact	Coded	Direct	Magnetic	Coded magnet	D.1
				RFID	Coded RFID tag	D.2
				Optic	Optically coded tag	-
Type 5	Mechanical (trapped key)	Coded	Indirect or direct		Profiled	K

From ISO 14119:2024 - Table 2

Requirements for the design and the installation of interlocking devices according to ISO 14119:2024 to reduce defeating of guards.

Principles and measures against defeating	Refe-rence	Type 1 devices		Type 2 and type 4 devices	
		Cam safety switches rotary or linear cam	Safety hinge switches	Actuators with low and medium coding level	Actuators with high coding level
Additional interlo-cking device and plausibility check	8.3 d) 2)	R		R	
Installation out of reach (1)	8.3 a) 1)	X		X	
Barriers or shielding (2)	8.3 a) 2)				
Installation in hidden position (3)	8.3 a) 3)				
Testing by means of control circuit (4)	8.3 d) 1)				
Non-detachable fixing of the actuator	8.3 c)			M	M
Non-detachable fixing of the device	8.3 c)			R	R
Non-detachable fixing of device and actuator	8.3 c)	X	M		

From ISO 14119:2024 - Table 5
Legend: X = mandatory to apply at least one of the measures listed in the "Principles and measures" column; M = mandatory measure; R = recommended measure.

It is clear that the use of devices with RFID technology, high coding level and hinged switches is the easiest way to meet the requirements of ISO 14119, as it is only necessary to fulfil a few requirements in order to prevent defeating of guards.
Devices with low or medium coding level require additional measures to ensure a tamperproof application.

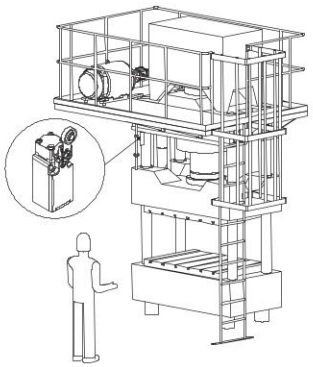

(1) - Installation out of reach

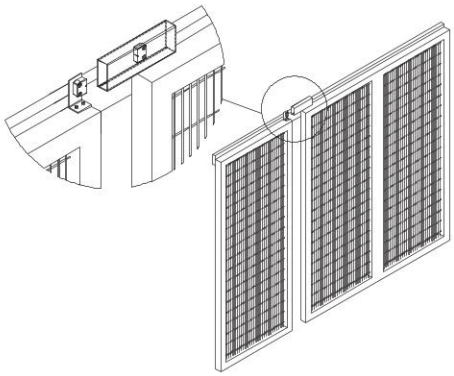

(2) - Barriers or shielding

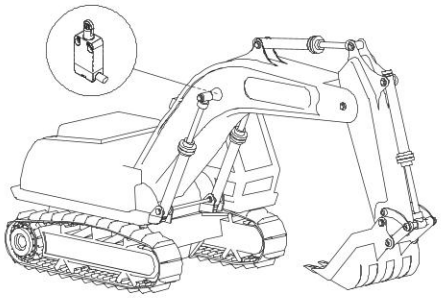

(3) - Installation in hidden position

(4) - Status monitoring or periodic testing can, for example, be performed on a machine with a simple operating cycle so as to verify that the guards are actually open at the end of or during specific operating phases (e.g. to remove the processed material or to perform quality controls). If status monitoring does not detect opening of the guard, an alarm is generated and the machine is stopped.

Non-detachable fixing

Non-detachable fixing is one of the solutions indicated by the standard to prevent disassembly or repositioning of the elements composing an interlocking device. The standard also provides some examples of non-detachable fixing. In particular, the third edition formally introduces **the possibility of using caps on the openings of bolts and screws that can only be removed by breaking them.** The examples given in the standard are:

- welding;
- glueing of the thread (strong enough to require either heat or a chemical agent for removal);
- one-way screws;
- riveting;
- grinding of slots on the heads of screws to prevent their removal;
- filling the openings of bolts and screws (with plastic, resin, **covers or caps that can only be removed by breaking them** or a metal sphere).

Guard locking devices and holding force

The manufacturer of the interlocking device with guard locking must ensure that the device can withstand at least the measured holding force F_{ZH} while the interlock is engaged. This holding force must not exceed the maximum holding force divided by a safety coefficient equal to 1.3.
Example: A device with maximum holding force of F_{ZH} =2000 N must pass a test with a maximum holding force equal to F_{TEST} =2600 N.
An interlocking device with guard locking can both monitor the position of the guard (open/closed) as well as lock the guard (locked/unlocked). Each of the two functions may require a different PL safety level (acc. to EN ISO 13849-1). The guard locking function generally requires a lower PL than the position monitoring function. (See paragraph 9.3, note 2 of ISO 14119:2024).
To identify whether an interlocking device also performs status monitoring, the standard specifies that the product label includes the symbol shown to the side here.

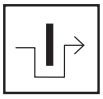

6 - Current status of the standards. Reason for changes, new standards and some overlapping

The "traditional" standards for functional safety, such as EN 954-1, played a large part in formalising some of the basic principles for the analysis of safety circuits on the basis of deterministic principles. On the other hand, they make no mention of the topic of programmable electronic control systems and are not generally in line with the current state of technology. To take programmable electronic control systems into account in the analysis of safety circuits, the approach taken by current standards is fundamentally probabilistic and introduces new statistical variables.

This approach is based on IEC 61508, which deals with the safety of complex programmable electronic systems and is very extensive (divided into 8 sections with nearly 500 pages). It is also used in a diverse range of application fields (chemical industry, machine construction, nuclear plants). This standard introduces the SIL concept (Safety Integrity Level), a probabilistic indication of a system's residual risk.

From IEC 61508 comes EN IEC 62061, which covers the functional safety of the complex electronic or programmable control systems in industrial applications. The concepts introduced here permit general use for any safety-related electrical, electronic and programmable electronic control systems (systems with non-electrical technologies are not covered).

EN ISO 13849-1, developed by CEN under the aegis of ISO, is also based on this probabilistic approach. This standard, however, attempts to structure the transition to the concepts in a less problematic way for the manufacturer, who is accustomed to the concepts of EN 954-1. The standard covers electromechanical, hydraulic, "non-complex" electronic systems and some programmable electronic systems with predefined structures. EN ISO 13849-1 is a type B1 standard and introduces the PL concept (Performance Level); as with SIL, the concept provides a probabilistic indication of a machine's residual risk. This standard points out a correlation between SIL and PL; concepts borrowed by EN 61508 – such as DC and CCF – are used and a connection to the safety categories of EN 954-1 is established.

Important note
EN 13849-1 is a type B1 standard; if a type C standard is already applied for a machine, the type C standard is to be used. Some type C standards not yet updated are based on the concepts of EN 954-1. For manufacturers of machines that are covered by a type C standard, the introduction time of the new standards depends on how quickly the various technical committees update the C standards.

In the area of functional safety for the safety of control circuits, there are thus two standards presently in force:
EN ISO 13849-1. Standard type B1, which uses the PL concept.
EN IEC 62061. Standard type B1, which uses the SIL concept.

There is clear overlapping of the two standards EN IEC 62061 and EN ISO 13849-1 concerning their application field and many aspects are similar; there is also a link between the two symbol names (SIL and PL), which indicate the result of the analyses according to the two standards.

PL EN ISO 13849-1	**a**	**b**	**c**	**d**	**e**
SIL EN IEC 62061 - IEC 61508	**-**	**1**	**1**	**2**	**3**
PFH_D [h^{-1}]	10^{-5} to 10^{-4}	$3x10^{-6}$ to 10^{-5}	10^{-6} to $3x10^{-6}$	10^{-7} to 10^{-6}	10^{-8} to 10^{-7}
A hazardous failure every n years	from ~1 to ~10	from ~10 to ~40	from ~40 to ~100	from ~100 to ~1000	from ~1000 to ~10000

The choice of the standard to be applied is left to the manufacturer according to the technology that is used. We believe that standard EN ISO 13849-1 is easier to use thanks to its mediatory approach and the re-utilisation of the concepts already introduced on the market.

7- Standard EN ISO 13849-1 and the new parameters: PL, $MTTF_D$, DC, CCF

Standard EN ISO 13849-1 offers the manufacturer an iterative method for assessing whether the hazards posed by a machine can be reduced to an acceptable residual level through the use of appropriate safety functions. The applied method specifies a hypothesis-analysis-validation cycle for each risk. Once completed, it must be possible to demonstrate that every selected safety function is appropriate for the respective risk.
The first step involves the determination of the required performance level, which is required of each safety function. Like EN 954-1, EN ISO 13849-1 also uses a risk graph for the risk analysis of a machine function (figure A.1). Instead of a safety category, however, this graph is used to determine – as a function of the risk – a Required Performance Level or PL_r for the safety function which protects the respective part of the machine.
Starting with point 1 of the graph, the machine manufacturer answers questions S, F and P and can then determine the PL_r for the safety function being examined. He must then develop a system with a performance level PL that is equal to or greater than that which is required to protect the operating personnel.

Risk graph for determining the required PL_r for the safety function (excerpt from EN ISO 13849-1, figure A.1)

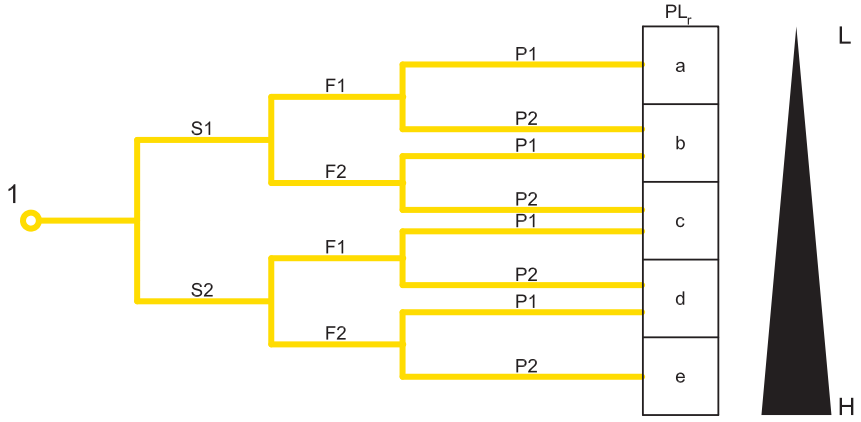

Legend

1 Starting point for the evaluation of the safety function's contribution to risk reduction
L Low contribution to risk reduction
H High contribution to risk reduction
PL_r Required performance level

* F1 should be selected if the total duration of the exposure to the hazard does not exceed 1/20 of the total work time and the frequency of exposure to the hazard does not exceed once every 15 minutes
****** If there are no other reasons, F2 should be selected if the frequency of exposure to the hazard is greater than once every 15 minutes.

Risk parameters

S Severity of injury
S1 Slight (normally reversible injury)
S2 Serious (normally irreversible injury or death)
F Frequency and/or exposure to hazard
***F1** Seldom-to-less-often and/or exposure time is short
****F2** Frequent-to-continuous and/or exposure time is long
P Possibility of avoiding hazard or limiting harm
P1 Possible under specific conditions
P2 Scarcely possible

Note: For a machine manufacturer, it may be of interest forego repeating the risk analysis of the machine and to instead to try and reuse the data already derived from the EN 954-1 risk analysis.
This is not generally possible, since the risk graph changed with the new standard (see previous figure) and, as a result, the required performance level of the safety function may have changed with identical risks. The German Institute for Occupational Safety and Health (BGIA), in its report 2008/2 on EN ISO 13849-1, recommends the following: assuming the "worst case", implementation can occur according to the table to the right. For further information, refer to the mentioned report.

Category required by EN 954-1		Required performance level (PLr) and category acc. to EN ISO 13849-1
B	→	b
1	→	c
2	→	d, Category 2
3	→	d, Category 3
4	→	e, Category 4

There are five performance levels, from PL a to PL e, with increasing risk; each represents a numerical range for the average probability of a dangerous failure per hour. For example, PL d specifies that the average probability of dangerous failures per hour is between $1x10^{-6}$ and $1x10^{-7}$, i.e., about 1 dangerous failure every 100-1000 years.

PL	Average probability of dangerous failures per hour PFH_D (h^{-1})		
a	$\geq 10^{-5}$	and	$< 10^{-4}$
b	$\geq 3 \times 10^{-6}$	and	$< 10^{-5}$
c	$\geq 10^{-6}$	and	$< 3 \times 10^{-6}$
d	$\geq 10^{-7}$	and	$< 10^{-6}$
e	$\geq 10^{-8}$	and	$< 10^{-7}$

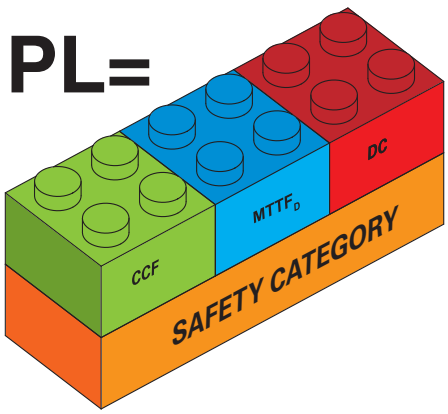

Several parameters are needed to determine the PL of a control system:
1. The safety category of the system, which is dependent on the architecture (structure) of the control system and its behaviour in the event of damage
2. $MTTF_D$ of the components
3. DC or Diagnostic Coverage of the system
4. CCF or Common Cause Failures

Safety category.
Most control circuits normally used can be represented with the following logic components:
- Input or signal input
- Logic or signal processing logic
- Output or output of the monitoring signal

These are connected to one another differently depending on the structure of the control circuit.

EN ISO 13849-1 allows for five different basic circuit structures, referred to as the designated architectures of the system. As shown in the following table, the architectures – combined with the requirements on the system behaviour in the event of failure and the minimum values of $MTTF_D$, DC and CCF – give the safety category of the system control. Thus, the safety categories of EN ISO 13849-1 are not the equivalent, but rather extend the concept of the safety category introduced by the previous standard EN 954-1.

Category	Summary of the requirements	System behaviour	Safety principles	$MTTF_D$ of each channel	DC_{avg}	CCF
B	Safety-related parts of monitoring systems and/or their protective equipment, as well as their accessories, must be designed, constructed, selected, assembled and combined in accordance with the relevant standards so that they can withstand the expected influences. Fundamental safety principles must be used. Architecture:	The occurrence of a fault can lead to the loss of the safety function.	Mainly determined by the selection of components	Low to medium	None	Not relevant
1	In addition to the requirements of Category B, proven components and safety principles must be used. Architecture:	The occurrence of a fault can lead to the loss of the safety function; the probability of fault occurrence is, however, lower than for Category B.	Mainly determined by the selection of components	High	None	Not relevant
2	Requirements of Category B and proven safety principles must be used. The safety function must be checked at appropriate intervals by the control system. Architecture: 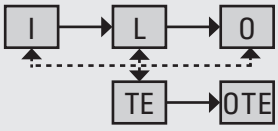	The occurrence of a fault between two checks can lead to the loss of the safety function. The loss of the safety function is detected through the check.	Determined mainly by the structure	Low to high	Low to medium	See Annex F
3	Requirements of Category B and proven safety principles must be used. Important safety-related parts must be designed so that: - A single fault in any of these parts does not lead to the loss of the safety function. - Where reasonably practicable, the single fault is detected. Architecture: 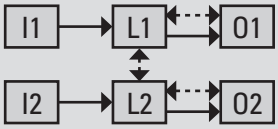	If a single fault occurs, the safety function is always performed. Some, but not all faults are detected. Accumulation of undetected faults can lead to the loss of the safety function.	Determined mainly by the structure	Low to high	Low to medium	See Annex F
4	Requirements of Category B and proven safety principles must be used. Important safety-related parts must be designed, so that: - a single fault in any of these parts does not lead to the loss of the safety function, and - a single fault during or before the next request for the safety function is detected. If this is not possible, the accumulation of undetected faults must not lead to the loss of the safety function. Architecture: 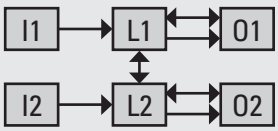	If a single fault occurs, the safety function is always performed. The detection of accumulated faults reduces the probability of the loss of the safety function (high DC). The faults are detected in time to prevent the loss of the safety function.	Determined mainly by the structure	High	High (including accumulation of faults)	See Annex F

$MTTF_D$ ("Mean Time To Dangerous Failure").
This parameter is used to determine the functional system quality over the mean lifetime in years before a dangerous failure occurs (other failures are not considered). The calculation of the $MTTF_D$ is based on numerical values supplied by the manufacturers of the individual components of the system. In the absence of this data, the values can be taken from the tables with guide values included in the standard (EN ISO 13849-1 Annex C). The evaluation results in a numerical value, divided into three categories: High, Medium or Low.

Classification	Values
Not acceptable	$MTTF_D$ < 3 years
Low	3 years ≤ $MTTF_D$< 10 years
Medium	10 years ≤ $MTTF_D$< 30 years
High	(30 years ≤ $MTTF_D$ ≤ 100 years

For components that are susceptible to high wear (typical for mechanical and hydraulic devices), the manufacturer supplies the value B_{10D} for the component, i.e., the number of component operations within which 10% of the samples failed dangerously, instead of the $MTTF_D$ of the component.
The B_{10D} value of the component must be converted to $MTTF_D$ by the machine manufacturer using the following formula:

$$MTTF_D = \frac{B_{10_D}}{0{,}1 \cdot n_{op}}$$

Where n_{op}= means number of annual operations for the component.
By assuming the daily operating frequency and the daily operating hours for the machine, n_{op} can be calculated as follows:

$$n_{op} = \frac{d_{op} \cdot h_{op} \cdot 3600s/h}{t_{ciclo}}$$

where
d_{op}= work days per year
h_{op}= operating hours per day
t_{cycle}= cycle time (s)

For components that are susceptible to wear, note that parameter $MTTF_D$ is dependent not only on the component itself but also on the application. An electromechanical device with low frequency of use, e.g. a remote switch that is only used for emergency stops, has a high $MTTF_D$; if the same device is used for normal processes in the operating cycle, the $MTTF_D$ of the same remote switch could drop dramatically.

All elements of the circuit contribute to the calculation of the $MTTF_D$ depending on their structure. In control systems with single-channel architecture (as is the case in categories B, 1 and 2), the contribution of each components is linear and the $MTTF_D$ of the channel is calculated as follows:

$$\frac{1}{MTTF_D} = \sum_{i=1}^{N} \frac{1}{MTTF_{D\,i}}$$

To avoid overly optimistic designs, the maximum value of the $MTTF_D$ of each channel is limited to 100 years (for categories B, 1, 2 and 3) or 2500 years (category 4). Channels with an $MTTF_D$ of less than 3 years are not allowed.

For two-channel systems (categories 3 and 4), the $MTTF_D$ of the circuit is calculated by averaging the $MTTF_D$ of the two channels using the following formula:

$$MTTF_D = \frac{2}{3}\left[MTTF_{DC1} + MTTF_{DC2} - \frac{1}{\frac{1}{MTTF_{DC1}} + \frac{1}{MTTF_{DC2}}}\right]$$

DC ("Diagnostic Coverage").

This parameter provides information on the effectiveness of a system's ability to self-detect any possible failures within the system. Using the percentage of the detectable dangerous failures, one obtains a diagnostic coverage of better or worse quality. The numerical DC parameter is a percentage value which is calculated using values taken from a table (EN ISO 13849-1 Annex E). Depending on the measures for failure detection taken by the manufacturer, example values are provided there. Because multiple measures are normally taken to rectify different anomalies in the same circuit, an average value or a DC_{avg} is calculated and can be assigned four levels:
High $DC_{avg} \geq 99\%$
Medium $90\% \leq DC_{avg} < 99\%$
Low $60\% \leq DC_{avg} < 90\%$
None $DC_{avg} < 60\%$
A diagnostic coverage of none is only permissible for systems of category B or 1.

CCF ("Common Cause Failures")
For the calculation of the PL for systems of category 2, 3 or 4, it is also necessary to evaluate possible common cause failures or CCF, which may compromise the redundancy of the system. The evaluation is performed using a checklist (Annex F of EN ISO 13849-1); on the basis of the measures taken against common cause failures, points from 0 to 100 are assigned. The minimum permissible value for categories 2, 3 and 4 is 65 points.

PL ("Performance Level")
Given these data, the EN ISO 13849-1 standard provides the PL of the system through a correlation table (Annex K, EN ISO 13849-1) or, alternatively, using a simplified graphic (section 4.5 of EN ISO 13849-1), through the following figure:

Relationships between the categories, DC_{avg}, $MTTF_D$ of each channel and PL (acc. to EN ISO 13849-1, figure 5)

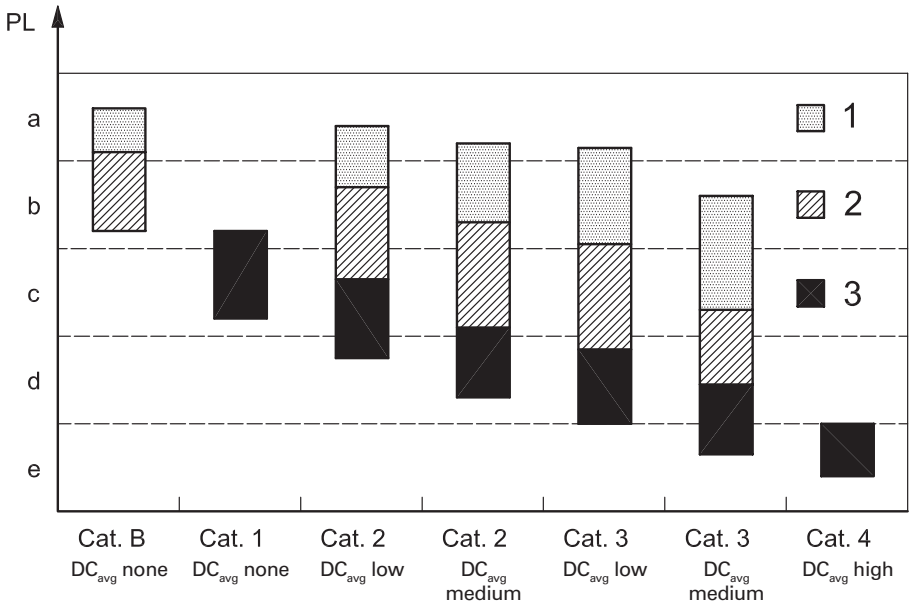

1 = $MTTFD_{of\ each\ channel}$ = Low
(3 years ≤ $MTTF_D$ < 10 years)

2 = $MTTF_D$ of each channel = Medium
(10 years ≤ $MTTF_D$ < 30 years)

3 = $MTTF_D$ of each channel = High
(30 years ≤ $MTTF_D$ ≤ 100 years)

This figure is very useful, as it can be read from multiple points of view. For a given PL_r, it shows all possible solutions with which this PL can be achieved, i.e., the possible circuit structures that provide the same PL.

Considering the figure more closely, it is seen that the following possibilities exist for a system with PL equal to "c":
1. Category 3 system with less reliable components ($MTTF_D$=low) and medium DC.
2. Category 3 system with reliable components ($MTTF_D$=medium) and low DC.
3. Category 2 system with reliable components ($MTTF_D$=medium) and medium DC.
4. Category 2 system with reliable components ($MTTF_D$=medium) and low DC.
5. Category 1 system with very reliable components ($MTTF_D$=high).

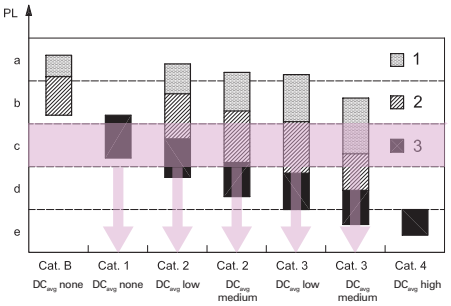

Considering a given circuit structure, in this figure one can also identify the maximum PL that can be reached depending on the average diagnostic coverage and the $MTTF_D$ of the components.
Thus, the manufacturer can exclude a number of circuit structures in advance, as they do not meet the required PL_r.

However, the figure is not usually used to determine the PL of the system since the graphic areas overlap the boundaries of the different PL levels in many cases. Instead, the table in Annex K of standard EN ISO 13849-1 is used to precisely determine the PL of the circuit.

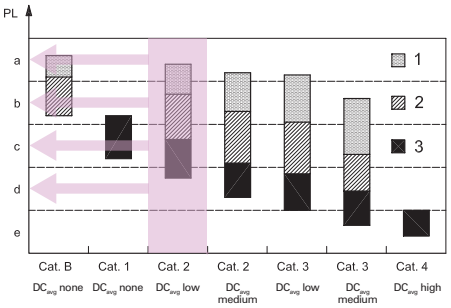

Notes

Table of safety parameters

The B_{10D} data in the table refers to the mechanical life of the device contacts under normal ambient conditions.
The value of B_{10D} for NC and NO contacts refers to a maximum electrical load of 10% of the current value specified in the utilisation category. Mission time (for all articles listed below): 20 years.

Electromechanical control devices

Series	Article description	B_{10D} (NO)	B_{10D} (NC)	B_{10}/B_{10D}
F• ••••	Position switches	1,000,000	40,000,000	50%
F• ••93 F• ••92	Safety switches with separate actuator	1,000,000	2,000,000	50%
F• ••99 F• ••R2	Safety switches with separate actuator with lock	1,000,000	1,000,000	50%
FG, FY	Safety switches with separate actuator with lock	1,000,000	5,000,000	20%
FS	Safety switches with separate actuator with lock	1,000,000	4,000,000	20%
F• ••96 F• ••95	Safety switches with hinge pin	1,000,000	5,000,000	20%
F• ••C•	Switches with slotted hole lever for hinged guards	1,000,000	2,000,000	50%
F• ••••	Rope switches for emergency stop	100,000	200,000	50%
HP - HX B•22-•••	Safety hinges	1,000,000	5,000,000	20%
SR	Magnetic safety sensors (with compatible Pizzato Elettrica safety modules)	20,000,000	20,000,000	50%
SR	Magnetic safety sensors (used at max. load: DC12 24 V 250 mA)	400,000	400,000	100%
PX, PA	Foot switches	1,000,000	20,000,000	50%
MK	Micro position switches	1,000,000	20,000,000	50%
NA B•• - NA G•• - NA H•• - NA L•• NB B•• - NB G•• - NB H•• - NB L•• NF B•• - NF G•• - NF H•• - NF L••	Modular pre-wired position switches	1,000,000	40,000,000	50%
NA C•• - NB C•• - NF C••	Modular pre-wired position switches	1,000,000	10,000,000	50%
E2 C•••••••	Contact blocks	1,000,000	40,000,000	50%

Series	Article description	B_{10D}	B_{10}/B_{10D}
E2 •PU1••••••, E2 •PL1••••••	Single buttons, maintained	2,000,000	50%
E2 •PU2••••••, E2 •PL2••••••	Single buttons, spring-return	30,000,000	50%
E2 •PD••••••, E2 •PT••••••	Double and triple buttons	2,000,000	50%
E2 •PQ••••••	Quadruple buttons	2,000,000	50%
E2 •PE••••••	Emergency stop buttons	600,000	50%
VN NG-AC2605•	Emergency stop buttons integrated into NG, NS, BN series devices	100,000	50%
E2 •SE••••••, E2 •SL••••••	Selector switches with and without illumination	2,000,000	50%
E2 •SC••••••	Key selector switches	600,000	50%
E2 •MA••••••	Joysticks	2,000,000	50%

ATEX series	Article description	B_{10D} (NO)	B_{10D} (NC)	B_{10}/B_{10D}
F• ••••-EX•	Position switches	500,000	20,000,000	50%
F• ••93-EX•	Safety switches with separate actuator	500,000	1,000,000	50%
F• ••99-EX• F• ••R2-EX•	Safety switches with separate actuator with lock	500,000	500,000	50%
F• ••96-EX• F• ••95-EX•	Safety switches with hinge pin	500,000	2,500,000	20%
F• ••C•-EX•	Switches with slotted hole lever for hinged guards	500,000	1,000,000	50%
F• ••••-EX•	Rope switches for emergency stop	500,000	1,000,000	50%

Electronic devices

Code/series	Article description	$MTTF_D$	DC	PFH_D	SIL	PL	Cat
HX BEE1-•••	Safety hinges with electronic unit	2413	High	1.24E-09	3	e	4
ST D••••••	Safety sensors with RFID technology	4077	High	1.20E-11	3	e	4
ST G••••••, ST H••••••	Safety sensors with RFID technology	1551	High	1.19E-09	3	e	4
NG	RFID safety switches with lock						
	Monitoring function: actuator locked - Mode 1	2968	High	1.15E-09	3	e	4
	Monitoring function: actuator present - Mode 2	3946	High	1.15E-09	3	e	4
	Monitoring function: actuator locked - Mode 3	2957	High	1.48E-09	2	d	2
	Monitoring function: actuator present - Mode 3	3927	High	1.48E-09	2	d	2
	Dual-channel control for locking function of the actuator	4011	High	1.51E-10	3	e	4
	Single-channel control for locking function of the actuator	4011	High	1.51E-10	2	d	2
NS	RFID safety switches with lock						
	Monitoring function: actuator locked - Mode 1	2657	High	1.23E-09	3	e	4
	Monitoring function: actuator present - Mode 2	1840	High	1.22E-09	3	e	4
	Monitoring function: actuator locked - Mode 3	2627	High	1.50E-09	2	d	2
	Monitoring function: actuator present - Mode 3	3987	High	1.49E-09	2	d	2
	Dual-channel control for locking function of the actuator	2254	High	2.04E-10	3	e	4
	Single-channel control for locking function of the actuator	2254	High	2.04E-10	2	d	2
NX	RFID safety switches with lock						
	Monitoring function: actuator locked - Mode 1	1688	High	3,07E-10	3	e	4
	Monitoring function: actuator present - Mode 2	1694	High	3,07E-10	3	e	4
	Dual-channel control for locking function of the actuator	1639	High	2,82E-10	3	e	4
	Single-channel control for locking function of the actuator	1639	High	2,82E-10	2	d	2

Electronic devices

Code/series	Article description	$MTTF_D$	DC	PFH_D	SIL	PL	Cat
CS AM-01	Safety module for standstill monitoring	218	Medium	8.70E-09	2	d	3
CS AM••							
SF1 (standstill)	Motor standstill monitoring	70	High	1,00E-09	3	e	4
SF2 (speed)	Motor speed monitoring	70	High	1,00E-09	3	e	4
SF3 (rotation)	Motor direction of rotation monitoring	67	High	2,06E-08	2	d	2
SF2 + SF3 (speed & rotation)	Monitoring of motor speed and direction of rotation	67	High	2,06E-08	2	d	2
SF2 + SF3 (dual speed)	Motor speed monitoring (dual range)	67	High	2,06E-08	2	d	2
CS AR-01, CS AR-02	Safety modules for monitoring guards and emergency stops	227	High	1.18E-10	3	e	4
CS AR-04	Safety module for monitoring guards and emergency stops	152	High	1.84E-10	3	e	4
CS AR-05, CS AR-06	Safety modules for monitoring guards, emergency stops and light barriers	152	High	1.84E-10	3	e	4
CS AR-07	Safety module for monitoring guards and emergency stops	111	High	7.56E-10	3	e	4
CS AR-08	Safety module for monitoring guards, emergency stops and light barriers	1547	High	9.73E-11	3	e	4
CS AR-20, CS AR-21	Safety modules for monitoring guards and emergency stops	225	High	4.18E-10	3	e	3
CS AR-22, CS AR-23	Safety modules for monitoring guards and emergency stops	151	High	5.28E-10	3	e	3
CS AR-24, CS AR-25	Safety modules for monitoring guards and emergency stops	113	High	6.62E-10	3	e	3
CS AR-40, CS AR-41	Safety modules for monitoring guards and emergency stops	225	High	4.18E-10	2	d	2
CS AR-46	Safety module for monitoring guards and emergency stops	435	-	3.32E-08	1	c	1
CS AR-51	Safety module for monitoring safety mats and safety bumpers	212	High	3.65E-09	3	e	4
CS AR-90	Safety module for monitoring floor leveling in lifts	382	High	5.03E-10	3	e	4
CS AR-91	Safety module for monitoring floor leveling in lifts	227	High	1.18E-10	3	e	4
CS AR-93	Safety module for monitoring floor leveling in lifts	227	High	1.34E-10	3	e	4
CS AR-94	Safety module for monitoring floor leveling in lifts	227	High	1.13E-10	3	e	4
CS AR-95	Safety module for monitoring floor leveling in lifts	213	High	5.42E-09	3	e	4
CS AT-0•, CS AT-1•	Safety modules with timer for monitoring guards and emergency stops	88	High	1.23E-08	3	e	4
CS AT-3•	Safety module with timer for monitoring guards and emergency stops	135	High	1.95E-09	3	e	4
CS DM-01	Safety module for monitoring two-hand controls	142	High	2.99E-08	3	e	4
CS DM-02	Safety module for monitoring two-hand controls	206	High	2.98E-08	3	e	4
CS DM-20	Safety module for monitoring two-hand controls	42	-	1.32E-06	1	c	1
CS FS-1•	Safety timer module	404	High	5.06E-10	3	e	4
CS FS-2•, CS FS-3•	Safety timer modules	205	High	1.10E-08	2	d	3
CS FS-5•	Safety timer module	379	Medium	1.31E-09	2	d	3
CS ME-01	Contact expansion module	91	High	5.26E-10	①	①	①
CS ME-02	Contact expansion module	114	High	4.17E-10	①	①	①
CS ME-03	Contact expansion module	152	High	3.09E-10	①	①	①
CS ME-20	Contact expansion module	114	High	6.14E-10	①	①	①
CS ME-31	Contact expansion module	110	High	4.07E-09	①	①	①
CS M•201	Multifunction safety modules	135	High	1.44E-09	3	e	4
CS M•202	Multifunction safety modules	614	High	1.32E-09	3	e	4
CS M•203	Multifunction safety modules	103	High	1.61E-09	3	e	4
CS M•204	Multifunction safety modules	134	High	1.52E-09	3	e	4
CS M•205	Multifunction safety modules	373	High	2.19E-09	3	e	4
CS M•206	Multifunction safety modules	3314	High	1.09E-09	3	e	4
CS M•207	Multifunction safety modules	431	High	7.08E-09	3	e	4
CS M•208	Multifunction safety modules	633	High	7.02E-09	3	e	4
CS M•301	Multifunction safety modules	128	High	1.88E-09	3	e	4
CS M•302	Multifunction safety modules	535	High	1.57E-09	3	e	4
CS M•303	Multifunction safety modules	485	High	1.76E-09	3	e	4
CS M•304	Multifunction safety modules	98	High	2.05E-09	3	e	4
CS M•305	Multifunction safety modules	535	High	1.57E-09	3	e	4
CS M•306	Multifunction safety modules	100	High	1.86E-09	3	e	4
CS M•307	Multifunction safety modules	289	High	8.38E-09	3	e	4
CS M•308	Multifunction safety modules	548	High	7.27E-09	3	e	4
CS M•309	Multifunction safety modules	496	High	7.46E-09	3	e	4
CS M•310	Multifunction safety modules	288	High	3.46E-09	3	e	4
CS M•311	Multifunction safety modules	363	High	7.52E-09	3	e	4
CS M•312	Multifunction safety modules	380	High	8,20E-09	3	e	4
CS M•401	Multifunction safety modules	434	High	1.73E-09	3	e	4
CS M•402	Multifunction safety modules	478	High	7.24E-09	3	e	4
CS M•403	Multifunction safety modules	438	High	7.42E-09	3	e	4
CS M•406	Multifunction safety modules	473	High	1.54E-09	3	e	4

B_{10D}: Number of operations after which 10% of the components have failed dangerously
B_{10}: Number of operations after which 10% of the components have failed
B_{10}/B_{10D}: Ratio of total failures to dangerous failures.
$MTTF_D$: Mean Time To Dangerous Failure expressed in years

DC: Diagnostic Coverage
PFH_D: Probability of Dangerous Failure per hour
SIL CL: Safety Integrity Level Claim Limit. Maximum achievable SIL according to EN IEC 62061
PL: Performance Level. PL acc. to EN ISO 13849-1

① = Depending on the base module

EXAMPLE 1
Application: Guard monitoring

Reference standard EN ISO 13849-1	
Safety category	**1**
Performance Level	**PL c**

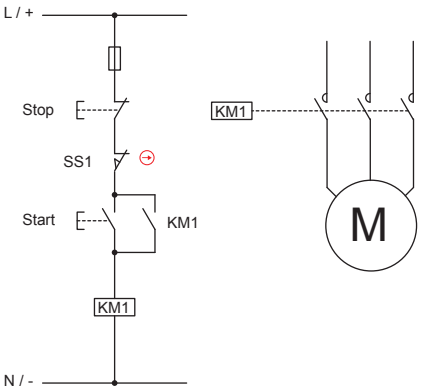

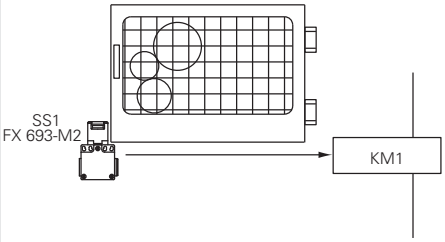

Description of the safety function
The control circuit illustrated above has a guard monitoring function. If the guard is open the engine must not be able to start. The hazard analysis showed that the system has no inertia or rather that the engine, once the power has been switched off, stops at a much faster rate than the opening of the guard. The risk analysis has shown that the required PL_r target is PL c. This is necessary to verify if the intended control circuit with single channel structure is provided with a PL higher or equal to PL_r.
The guard position is detected by the switch with separate actuator SS1, which operates directly on the contactor KM1. The contactor KM1 monitoring the moving parts is usually activated by the Start and Stop buttons. Though, the analysis of the working cycle has shown that the guard is opening at every switching operation too. Therefore, the number of switch operations by the contactor and by the safety switch can be considered equal.
A circuit structure is defined as single-channel without supervision (category B or 1) if there are only an Input component (switch) and an Output (contactor) component.
In case a failure on one of the two devices the safety function is not guaranteed anymore.
No measures for fault detection have been applied.

Device data:
- SS1 (FX 693-M2) is a switch with positive opening (in accordance with EN 60947-5-1, Annex K). The switch is a well-tried component according to EN ISO 13849-2 table D.4. The B_{10D} value of the device supplied by the manufacturer is equal to 2,000,000 switching operations.
- KM1 is a contactor operated at nominal load and is a well-tried component in compliance with EN ISO 13849-2, table D.4. The B_{10D} value of this component is equal to 1,300,000 switching operations. This value results from the tables of the applicable standard (see EN ISO 13849-1, table C.1).

Assumption of the frequency of use
- It is assumed that the equipment is used for a maximum of 365 days per year, for three shifts of 8 hours and 600 s cycle time. For the switch, the number of switching operations per year is equal to maximum N_{op}= (365x24x3,600)/600 = 52,560.
- It is assumed that the start button is operated every 300 seconds. Therefore, the maximum number of switching operations per year is equal to n_{op}/year = 105,120
- The contactor KM1 is actuated both for the normal start-stop of the machine as well as for the restart after a guard opening. n_{op}/year = 52,560+105,120 = 157,680

$MTTF_{d\ calculation}$
The $MTTF_d$ of the SS1 switch is equal to: $MTTF_d = B_{10D} /(0,1 \times n_{op})$ = 2,000,000/(0,1 x 52560) = 381 years
The$MTTF_d$ of the KM1 contactor is equal to: $MTTF_D = B_{10D} /(0.1 \times n_{op})$ = 1,300,000/(0.1 x 157680) = 82 years
Therefore, the $MTTF_d$ of the single-channel circuit is equal to: 1/(1/381+1/82) = 67 years

Diagnostic Coverage DCavg
No measures for fault detection have been applied and there is therefore no diagnostic coverage, a permissible condition for the circuit in question that is in category 1.

CCF Common Cause Failures
The CCF calculation is not required for category 1 circuits.

PL determination
Using the graph or the figure no. 5 of the standard, it can be verified that for a Category 1 circuit with $MTTF_D$ = 95 years the resulting PL of the control circuit is PL c. The PL_r target is therefore achieved.

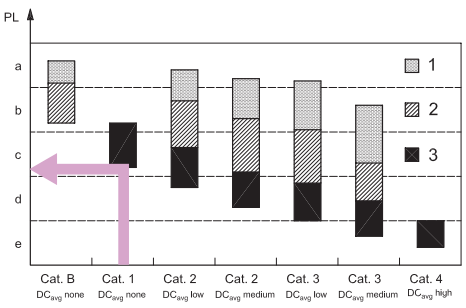

Any information or application example, connection diagrams included, described in this document are to be intended as purely descriptive.
The choice and application of the products in conformity with the standards, in order to avoid damage to persons or goods, is the user's responsibility.

EXAMPLE 2
Application: Emergency stop control

Reference standard EN ISO 13849-1	
Safety category	3
Performance Level	PL e

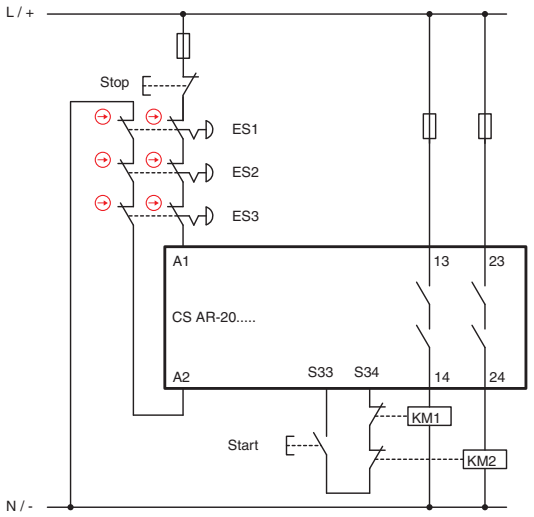

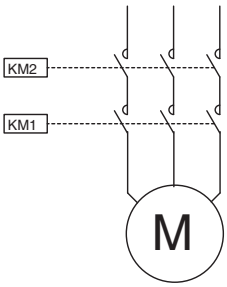

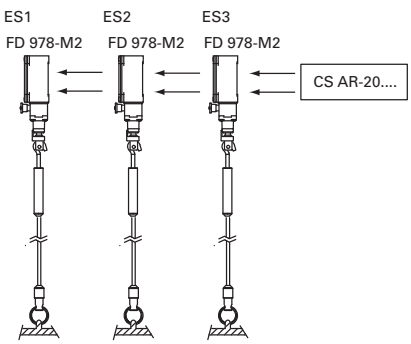

Description of the safety function
The operation of one of the emergency devices causes the intervention of the safety module and the two contactors KM1 and KM2. The signal of the devices ES1, ES2, ES3 is redundantly read by the CS safety module. The contactors KM1 and KM2 (with forcibly guided contacts) are monitored by the CS via the feedback circuit too.

Device data:
- The devices ES1, ES2, ES3 (FD 978-M2) are rope switches for emergency stop with positive opening. The B_{10D} value is 2,000,000
- KM1 and KM2 are contactors operated at nominal load. The B_{10D} value is 1,300,000 (see EN ISO 13849-1 - Table C.1)
- CS is a safety module (CS AR-20) with $MTTF_D$ = 225 years and DC High
- The circuit structure is two-channel in category 3

Assumption of the frequency of use
- Twice a month, nop/year = 24
- Start button actuation: 4 times a day
- Assuming 365 working days, the contactors will take action 4 x 365 + 24 = 1484 times / year
- The switches will be operated with the same frequency.
- It is not expected that multiple buttons will be pressed simultaneously.

$MTTF_{d\ calculation}$
- $MTTF_{D\ ES1,ES2,ES3}$ = 833,333 years
- $MTTF_{D\ KM1,KM2}$ = 8760 years
- $MTTF_{D\ CS}$ = 225 years
- $MTTF_{D\ ch1}$ = 219 years. The value must be limited to 100 years. The channels are symmetric, therefore $MTTF_D$ = 100 years (High)

Diagnostic Coverage DC_{avg}
- The contacts of KM1 and KM2 are monitored by the CS module via the feedback circuit. DC = 99% (High)
- The safety module CS AR-20 is provided with a "High" diagnostic coverage.
- Not all failures in the series of emergency devices can be detected. The diagnostic coverage is 90% (Medium)

CCF Common Cause Failures
We assume a score > 65 (acc. to EN ISO 13849-1 - Annex F).

PL determination
A circuit in category 3 with $MTTF_D$ = High and DC_{avg} = High can reach a PL e.

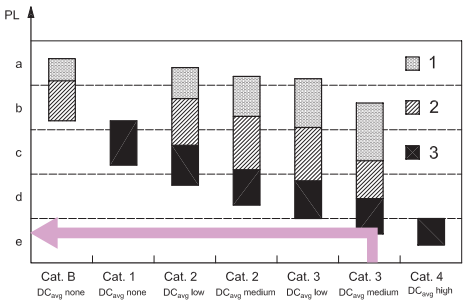

Any information or application example, connection diagrams included, described in this document are to be intended as purely descriptive.
The choice and application of the products in conformity with the standards, in order to avoid damage to persons or goods, is the user's responsibility.

EXAMPLE 3
Application: Guard monitoring

Reference standard EN ISO 13849-1	
Safety category	**4**
Performance Level	**PL e**

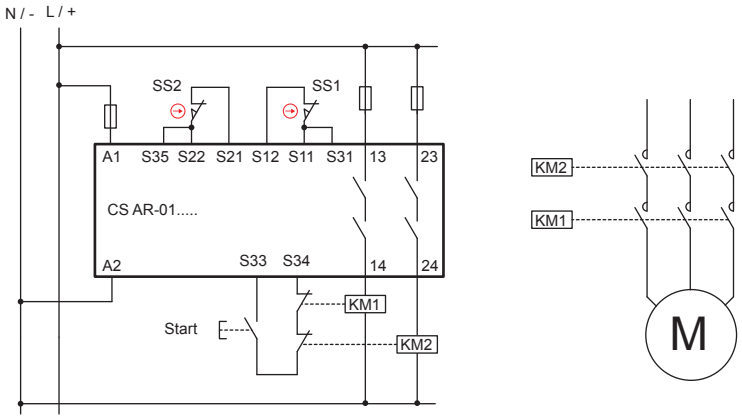

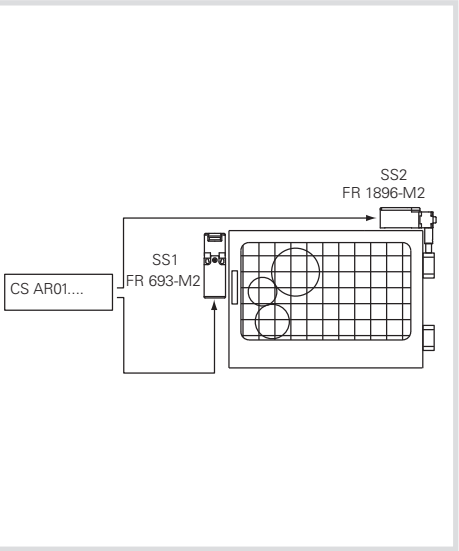

Description of the safety function
The guard opening causes the intervention of the switches SS1 and SS2 and, by consequence, of the safety module and the KM1 and KM2 contactors too.
The signal of the devices SS1 and SS2 is redundantly monitored by the CS safety module.
The switches have different operating principles.
The contactors KM1 and KM2 (with forcibly guided contacts) are monitored by the CS via the feedback circuit too.

Device data:
- The switch SS1 (FR 693-M2) is a switch with positive opening. The B_{10D} value is 2,000,000
- The switch SS2 (FR 1896-M2) is a hinge switch with positive opening. B_{10D}= 5,000,000
- KM1 and KM2 are contactors operated at nominal load. B_{10D} = 1,300,000 (see EN ISO 13849-1 - Table C.1)
- The CS modules are safety modules (CS AR-01) with $MTTF_d$ = 227 years and DC = High

Assumption of the frequency of use
365 days/year, 16 h/day, 1 action every 4 minutes (240 s). n_{op}/year = 87,600.

$MTTF_{d\ calculation}$
- $MTTF_{D\ SS1}$ = 228 years
- $MTTF_{D\ SS2}$ = 571 years
- $MTTF_{D\ KM1,KM2}$ = 148 years
- $MTTF_{D\ CS}$ = 227 years
- $MTTF_{D\ CH1}$ = 64 years (SS1,CS,KM1)
- $MTTF_{D\ CH2}$ = 77 years (SS2,CS,KM2)
- $MTTF_D$: by calculating the average of the two channels $MTTF_D$ = 70.7 years (High) is achieved

Diagnostic Coverage DC_{avg}
- SS1 and SS2 have DC = 99% since the SS1 and SS2 contacts are monitored by CS and have different operation principles.
- The contacts of KM1 and KM2 are monitored by the CS module via the feedback circuit. DC = 99% (High)
- CS AR-01 is provided with an internal redundant and self-monitoring circuit. DC = High
- DC_{avg}= High

PL determination
A circuit in category 4 with $MTTF_D$ = 72.1 years and DC_{avg} = High corresponds to PL e.

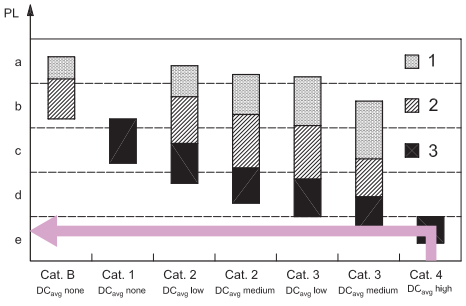

Any information or application example, connection diagrams included, described in this document are to be intended as purely descriptive.
The choice and application of the products in conformity with the standards, in order to avoid damage to persons or goods, is the user's responsibility.

EXAMPLE 4
Application: Guard monitoring

Reference standard EN ISO 13849-1	
Safety category	**4**
Performance Level	**PL e**

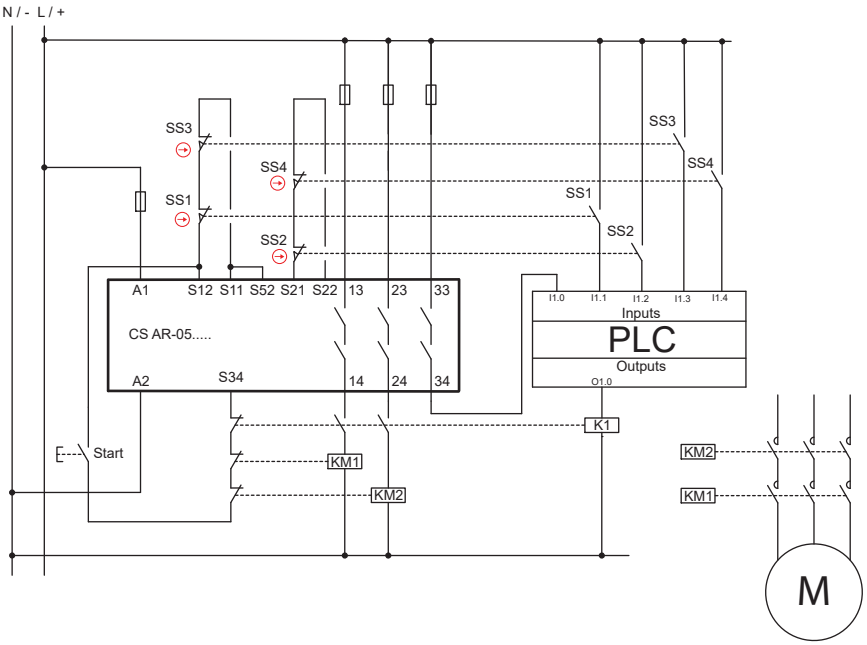

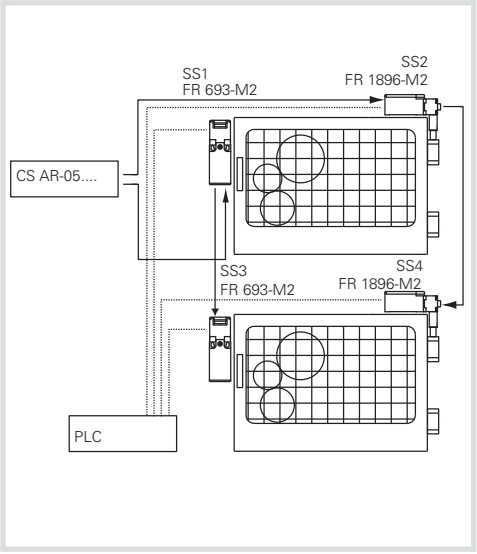

Description of the safety function
The opening of a guard triggers switches SS1 and SS2 on the first guard and triggers SS3, SS4 on the second; the switches trigger the safety module and both contactors KM1 and KM2.
The signal of the devices SS1, SS2 and SS3, SS4 is redundantly monitored by the CS safety module. Furthermore, an auxiliary contact of the switch is monitored by the PLC.
The switches have different operating principles.
The contactors KM1 and KM2 (with forcibly guided contacts) are monitored by the CS via the feedback circuit too.

Device data:
- The switches SS1, SS3 (FR 693-M2) are switches with positive opening. The B_{10D} value is 2,000,000
- The switches SS2, SS4 (FR 1896-M2) are hinge switches with positive opening. B_{10D}= 5,000,000
- KM1 and KM2 are contactors operated at nominal load. The B_{10D} value is 1,300,000 (see EN ISO 13849-1 - Table C.1)
- CS is a safety module (CS AR-05) with $MTTF_D$ = 152 years and DC = High

Assumption of the frequency of use
- 4 times per hour for 24 h/day for 365 days/year equal to n_{op}/year = 35,040
- The contactors will operate for twice the number of operations = 70,080

$MTTF_{d\ calculation}$
- $MTTF_{D\ SS1,SS3}$ = 571 years; $MTTF_{D\ SS2,SS4}$ = 1,427 years
- $MTTF_{D\ KM1,KM2}$ = 185 years
- $MTTF_{D\ CS}$ = 152 years
- $MTTF_{D\ Ch1}$ = 73 years (SS1, CS, KM1) / (SS3, CS, KM1)
- $MTTF_{D\ Ch2}$ = 79 years (SS2, CS, KM2) / (SS4, CS, KM2)
- $MTTF_D$: by calculating the average of the two channels $MTTF_D$ = 76 years (High) is achieved

Diagnostic Coverage DC_{avg}
- The contacts of KM1, KM2 are monitored by the CS module via the feedback circuit. DC = 99%
- All auxiliary contacts of the switches are monitored by the PLC. DC = 99%
- The CS AR-05 module has a DC = High
- The diagnostic coverage for both channels is 99% (High)

CCF Common Cause Failures
- We assume a score > 65 (acc. to EN ISO 13849-1 - Annex F).

PL determination
- A circuit in category 4 with $MTTF_D$ = 88.6 years (High) and DC_{avg} = High corresponds to PL e.

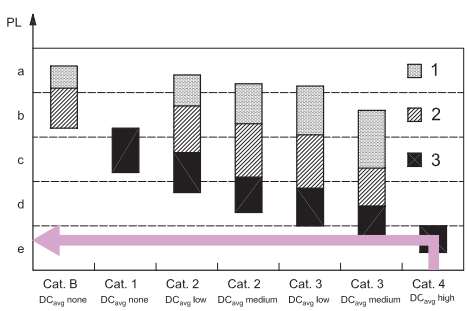

Any information or application example, connection diagrams included, described in this document are to be intended as purely descriptive.
The choice and application of the products in conformity with the standards, in order to avoid damage to persons or goods, is the user's responsibility.

EXAMPLE 5
Application: Guard monitoring

Reference standard EN ISO 13849-1	
Safety category	**4**
Performance Level	**PL e**

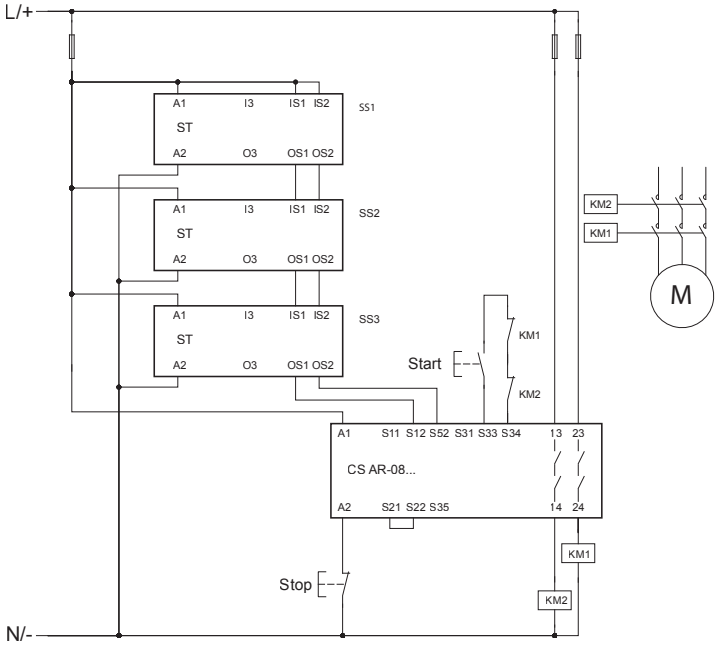

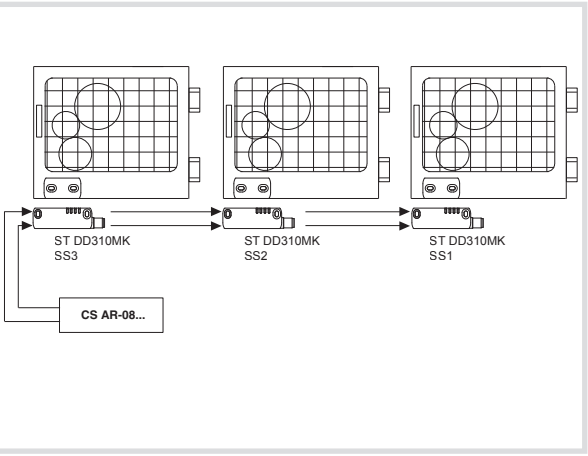

Description of the safety function
The opening of guards triggers the sensors SS1 on the first guard, SS2 on the second and SS3 on the third. The sensors trigger the safety module CS AR-08 and the contactors KM1 and KM2 too. The contactors KM1 and KM2 (with forcibly guided contacts) are monitored by the CS AR-08 via the feedback circuit.

Device data
SS1, SS2, SS3 are ST series coded sensors with RFID technology. PFH_D = 1.20E-11, PL = "e"
CS AR-08 is a safety module. PFH_D = 9.73E-11, PL = "e"
KM1 and KM2 are contactors operated at nominal load. B_{10D} = 1,300,000 (see EN ISO 13849-1 - Table C.1)

Assumption of the frequency of use
Each door is opened every 2 minutes, 16 hours a day, for 365 days a year, equal to n_{op} = 175,200
Definition of the SRP/CS and subsystems
The SRP/CS consists of 5 subsystems (SB):
SB1,2,3 represent the three ST series RFID sensors
SB4 represents the safety module CS AR-08
SB5 represents the two contactors KM1 and KM2 in redundant architecture (cat. 4)

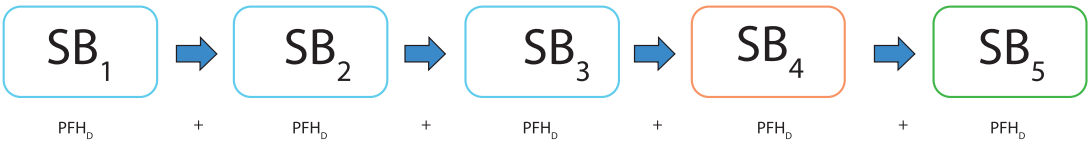

PFH_D calculation for SB5
$MTTF_D$ KM1,KM2 = 74.2 years.
DC = 99%, the contacts of KM1 and KM2 are monitored by the safety module via the feedback circuit.
For the CCF parameter we assume a score higher than 65 (acc. to EN ISO 13849-1 - Annex F).
A category 4 circuit with $MTTF_D$ = 74.2 years (high) and high diagnostic coverage (DC = 99%) corresponds to a failure probability of PFH_D = 3.4E-08 and a PL "e".

Calculation of the total PFH_D of the SRP/CS
$PFH_{DTOT} = PFH_{DSB1} + PFH_{DSB2} + PFH_{DSB3} + PFH_{DSB4} + PFH_{DSB5}$ = 3.5E-08
It corresponds to PL "e".

Calculation example performed with SISTEMA software, downloadable free of charge at www.pizzato.com

Any information or application example, connection diagrams included, described in this document are to be intended as purely descriptive.
The choice and application of the products in conformity with the standards, in order to avoid damage to persons or goods, is the user's responsibility.

EXAMPLE 6
Application: Guard monitoring

Reference standard EN ISO 13849-1	
Safety category	4
Performance Level	PL e

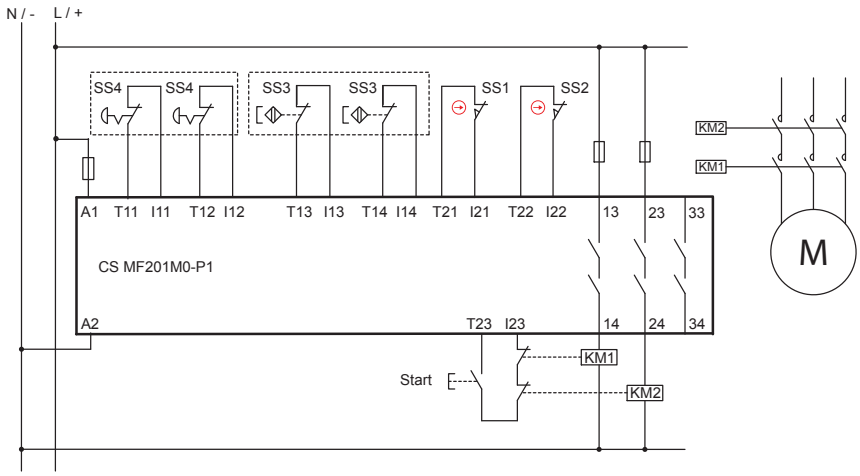

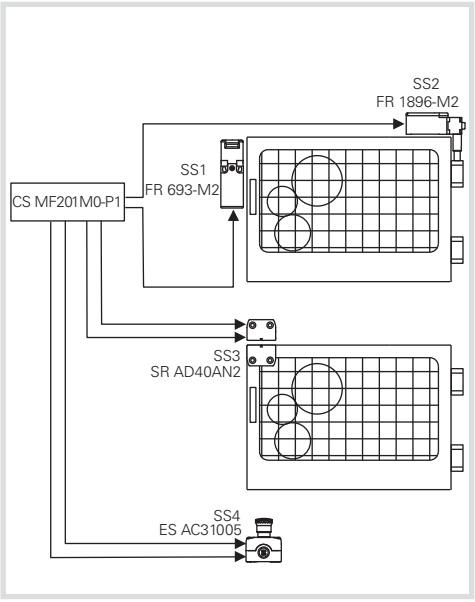

Description of the safety function

The opening of a guard triggers switches SS1 and SS2 on the first guard and triggers sensor SS3 on the second; the switches trigger the safety module and both contactors KM1 and KM2.
The signals from the SS1, SS2 and SS3 devices are redundantly monitored by the CS MF safety module.
There is also an emergency stop button which has a two-channel connection with the safety module too.
The contactors KM1 and KM2 (with forcibly guided contacts) are monitored by the CS MF via the feedback circuit too.

Device data:

- The switch SS1 (FR 693-M2) is a switch with positive opening. B_{10D} = 2,000,000
- The switch SS3 (FR 1896-M2) is a hinge switch with positive opening. B_{10D}= 5,000,000
- SS3 (SR AD40AN2) is a magnetic safety sensor. B_{10D} = 20,000,000
- SS4 (ES AC31005) is a housing with emergency stop button (E2 1PERZ4531) provided with 2 NC contacts. B_{10D} = 600,000
- KM1 and KM2 are contactors operated at nominal load. B_{10D} = 1,300,000 (see EN ISO 13849-1 - Table C.1)
- CS MF201M0-P1 is a safety module with $MTTF_D$ = 842 years and DC = 99%

Assumption of the frequency of use

- Each door is opened 2 times per hour for 16 h/day for 365 days/year equal to n_{op}/year = 11,680
- It is assumed that the emergency stop button is actuated at a maximum of once a day, n_{op}/year = 365
- The contactors will operate for twice the number of operations = 23,725

$MTTF_{d\ calculation}$

Guard SS1/SS2

- $MTTF_{D\ SS1,SS3}$ = 1,712 years
- $MTTF_{D\ SS2,SS4}$ = 4,281 years
- $MTTF_{D\ KM1,KM2}$ = 548 years
- $MTTF_{D\ CS}$ = 842 years
- $MTTF_{D\ CH1}$ = 278 years (SS1, CS, KM1)
- $MTTF_{D\ CH2}$ = 308 years (SS2, CS, KM2)
- $MTTF_D$ = by calculating the average of the two channels $MTTF_D$ = 293 years is achieved

Guard SS3

- $MTTF_{D\ SS3}$ = 17,123 years
- $MTTF_{D\ KM1,KM2}$ = 548 years
- $MTTF_{D\ CS}$ = 842 years
- $MTTF_D$ = 325 years

Emergency stop button SS4

- $MTTF_{D\ SS4}$ = 16,438 years
- $MTTF_{D\ KM1,KM2}$ = 548 years
- $MTTF_{D\ CS}$ = 842 years
- $MTTF_D$ = 325 years

Diagnostic Coverage DC_{avg}

- The contacts of KM1, KM2 are monitored by the CS MF module via the feedback circuit. DC = 99%
- For the devices SS1, SS2 and SS3 it is possible to detect all faults. DC = 99%
- The CS MF201M0-P1 module has a DC = 99%
- We assume a diagnostic coverage of 99% (High)

CCF Common Cause Failures

- We assume a score > 65 (acc. to EN ISO 13849-1 - Annex F).

PL determination

- A circuit in category 4 with $MTTF_D \geq 30$ years (High) and DC_{avg} = High corresponds to PL e.
- The safety functions associated to the guards SS1/SS2, SS3 and the emergency stop button present the level PL e.

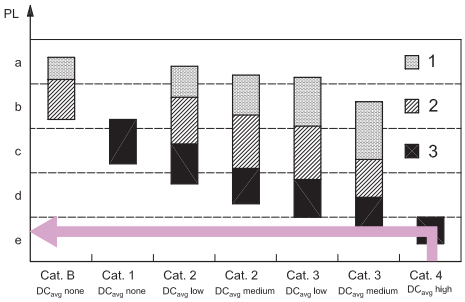

Any information or application example, connection diagrams included, described in this document are to be intended as purely descriptive.
The choice and application of the products in conformity with the standards, in order to avoid damage to persons or goods, is the user's responsibility.

EXAMPLE 7
Application: Guard monitoring

Reference standard EN ISO 13849-1	
Safety category	**4**
Performance Level	**PL e**

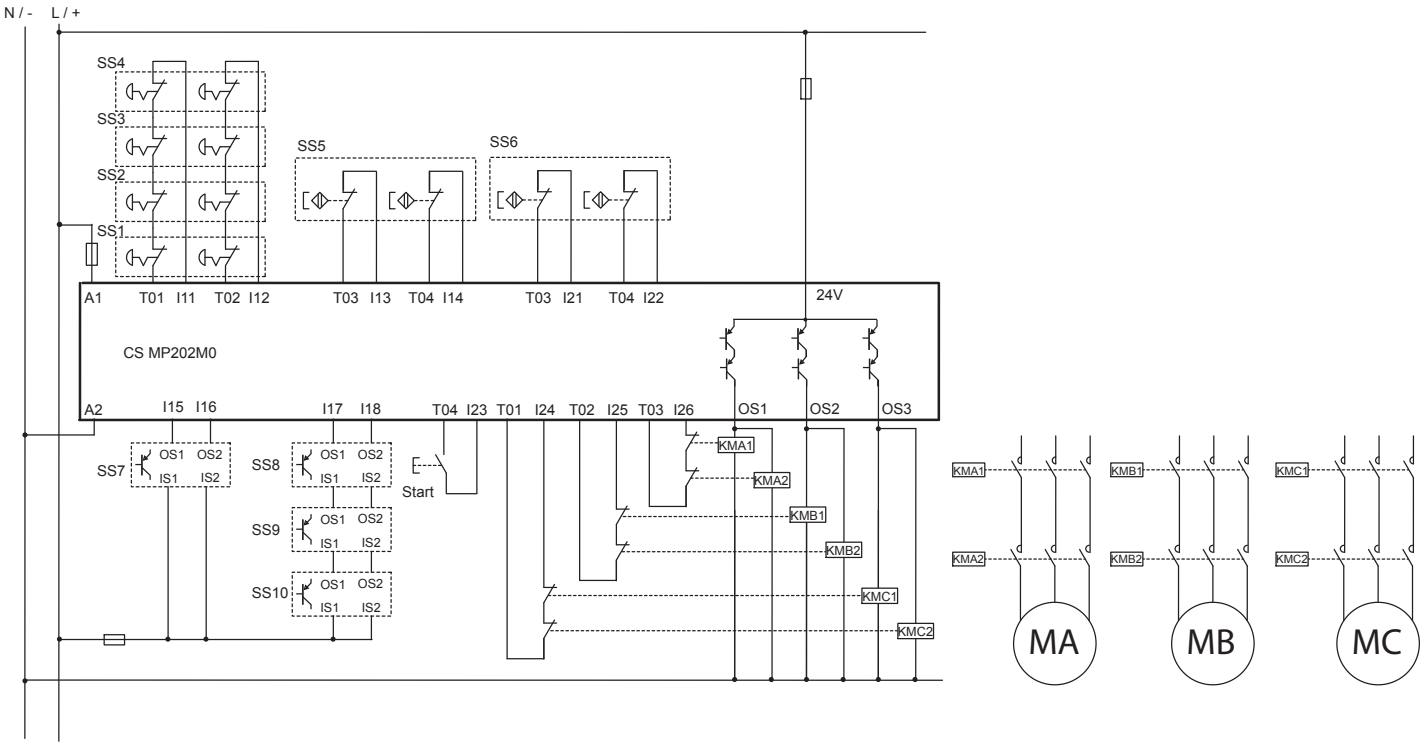

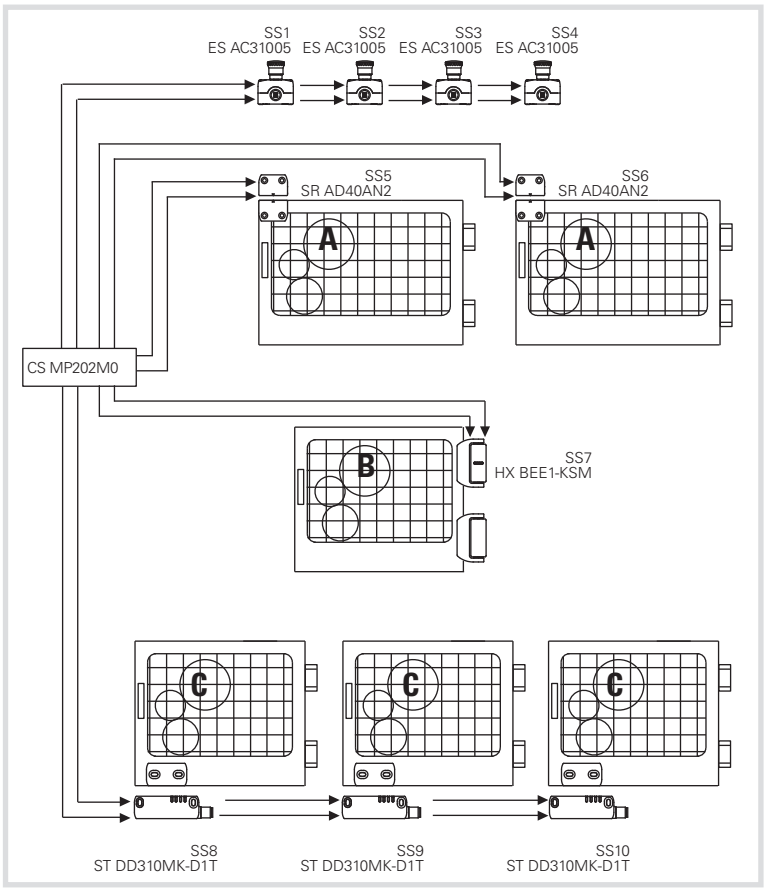

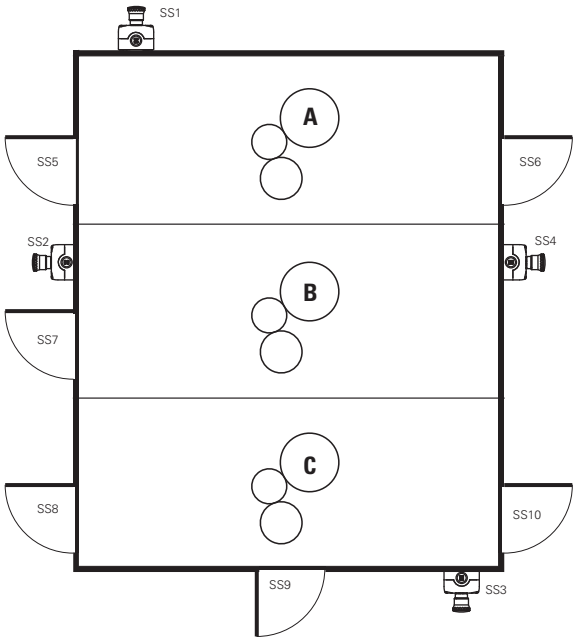

Description of the safety function

Every machine is divided into 3 different zones. The access to each zone is monitored by the guards and 4 emergency stop buttons are present too.
The operation of an emergency stop button will trigger the CS MP safety module as well as the forcibly guided contactors KMA1/2, KMB1/2 and KMC1/2, and will therefore stop all motors.
The opening of a guard in zone A triggers the devices SS5 or SS6 and, as a consequence, the CS MP safety module as well as the contactors KMA1 and KMA2, and therefore also the stop of the MA motor. The devices SS5 and SS6 are connected to the CS MP safety module separately, with a two-channel connection.
The opening of the guard in zone B triggers the device SS7 and, as a consequence, the CS MP safety module as well as the contactors KMB1 and KMB2, and therefore also the stop of the MB motor. The SS7 hinge is provided with two OSSD outputs and is redundantly controlled by the CS MP safety module.
The opening of a guard in zone C triggers the devices SS8, SS9 or SS10 and, as a consequence, the safety module as well as the contactors KMC1 and KMC2, and therefore also the stop of the MC motor. The sensors SS8, SS9 and SS10 are interconnected via the OSSD outputs and are redundantly monitored by the CS MP safety module.

Device data

- SS1, SS2, SS3 and SS4 (ES AC31005) are emergency stop buttons (E2 1PERZ4531) provided with 2 NC contacts. B_{10D} = 600,000
- SS5 and SS6 (SR AD40AN2) are magnetic safety sensors. B_{10D} = 20,000,000
- SS7 (HX BEE1-KSM) is a safety hinge with OSSD outputs. $MTTF_D$ = 4,077 years / DC = 99%
- SS8, SS9 and SS10 (ST DD310MK-D1T) are safety sensors with RFID technology and OSSD outputs. $MTTF_D$ = 4,077 years / DC = 99%
- KMA, KMB and KMC are contactors operated at nominal load. B_{10D} = 1,300,000 (see EN ISO 13849-1 - Table C.1)
- CS MP202M0 is a safety module with $MTTF_D$ = 2035 years / DC = 99%

Assumption of the frequency of use

- Each door of zone A is opened 2 times per hour for 16 h/day for 365 days/year equal to n_{op}/year = 11,680. The contactors will operate for twice the number of operations = 23,360
- The door of zone B is opened 4 times per hour for 16 h/day for 365 days/year equal to n_{op}/year = 23,360. The contactors will operate for a given number of operations = 23,360
- Each door of zone C is opened 1 time per hour for 16 h/day for 365 days/year equal to n_{op}/year = 5,840. The contactors will operate for a given number of operations = 17,520
- It is assumed that the emergency stop button is actuated at a maximum of once a week, n_{op}/year = 52
- Fault Exclusion: since it is assumed that the pairs of contactors, connected in parallel to the respective safety outputs, are wired permanently within the switching cabinet, the possibility of short-circuit between +24V and the contactors is excluded (see Table D.4, item D.5.2 of EN ISO 13849-2).

$MTTF_{d\ calculation}$

Emergency stop buttons
- $MTTF_D$ SS1/SS2/SS3/SS4 = 115,384 years
- $MTTF_D$ CS = 2035 years
- $MTTF_D$ KMC1,KMC2 = 742 years
- $MTTF_D$ e-stop = 541 years

Guards, zone A
- $MTTF_D$ SS5/SS6 = 17,123 years
- $MTTF_D$ CS = 2035 years
- $MTTF_D$ KMA1,KMA2 = 556 years
- $MTTF_D$ A = 425 years (SS5/SS6,CS,KMA)

Guards, zone B
- $MTTF_D$ SS7 = 4,077 years
- $MTTF_D$ CS = 2035 years
- $MTTF_D$ KMB1,KMB2 = 556 years
- $MTTF_D$ B = 394 years (SS7,CS,KMB)

Guards, zone C
- $MTTF_D$ SS8/SS9/SS10 = 4,077 years
- $MTTF_D$ CS = 2035 years
- $MTTF_D$ KMC1,KMC2 = 742 years
- $MTTF_D$ C = 479 years (SS8/SS9/SS10,CS,KMC)

Diagnostic Coverage DC_{avg}

- The contacts of KMA, KMB and KMC are monitored by the CS MP module via the feedback circuit. DC = 99%
- All faults in the various devices can be detected. DC = 99%
- The CS MP202M0 module has a DC = 99%
- The result is a diagnostic coverage of 99% for each function

CCF Common Cause Failures

- We assume a score > 65 for all safety functions (acc. to EN ISO 13849-1 - Annex F).

PL determination

- A circuit in category 4 with $MTTF_D \geq 30$ years (High) and DC_{avg} = High corresponds to PL e.
- All safety functions associated to the guards and the emergency stop buttons have PL e.

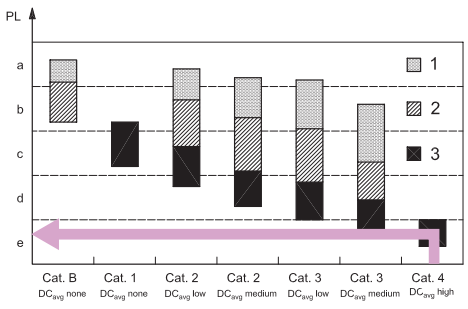

Any information or application example, connection diagrams included, described in this document are to be intended as purely descriptive.
The choice and application of the products in conformity with the standards, in order to avoid damage to persons or goods, is the user's responsibility.

EXAMPLE 8
Application: Guard monitoring

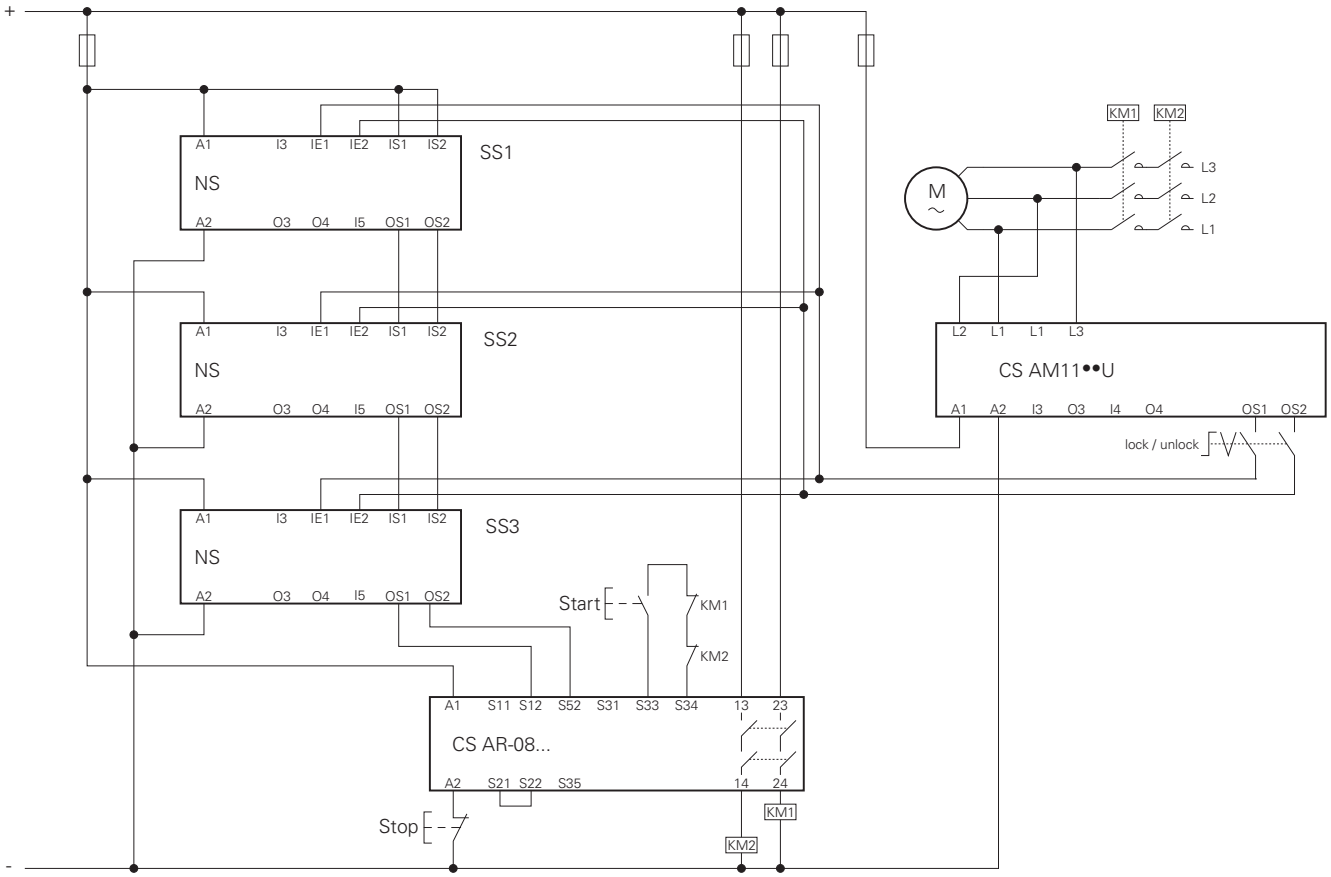

Reference standard EN ISO 13849-1	
Performance Level - Safety function 1	**PL e**
Performance Level - Safety function 2	**PL e**

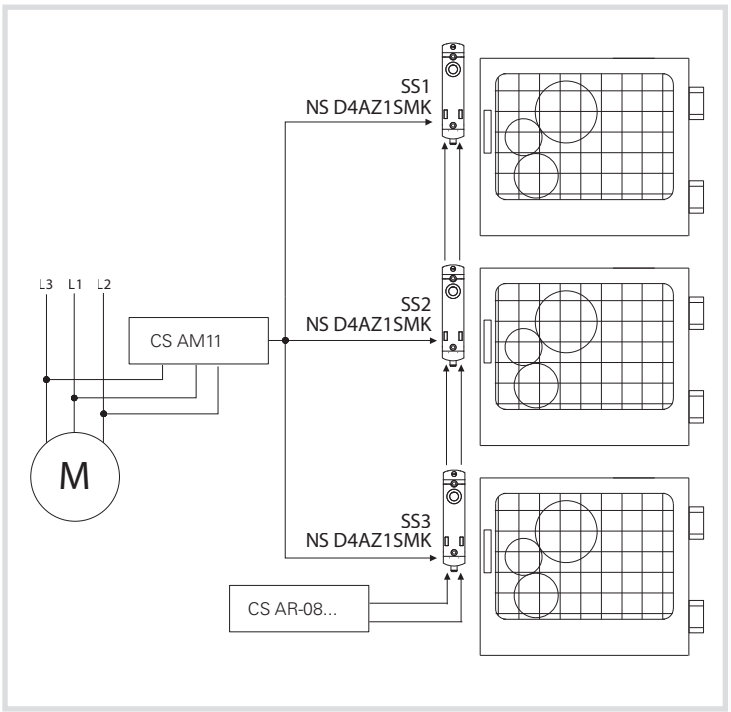

Description of the safety function
Interlocking devices SS1, SS2 and SS3 perform two safety functions: monitoring the locked state and locking the guard.
Once the guards have been released, the three sensors trigger the safety module and the contactors KM1 and KM2 too. The contactors KM1 and KM2 (with forcibly guided contacts) are monitored by the CS AR-08 via the feedback circuit.
The interlock command on the three devices SS1, SS2 and SS3 is maintained until the motor standstill monitoring module CS AM11 detects the actual stopping of movement.

Device data
SS1, SS2, SS3 are NS series coded interlock devices with RFID technology, with guard locking device. Locked protection detection function PFH_D = 1.23E-09 PL = "e", operating of locking control PFH_D = 2.04E-10 PL = "e".
CS AR-08 is a safety module, PFH_D = 9.73 E-11, PL = "e".
CS AM11 is a safety module for motor standstill monitoring, PFH_D = 1.00E-09, PL "e".
KM1 and KM2 are contactors operated at nominal load. B_{10D} = 1,300,000 (see EN ISO 13849-1 - Table C.1)

Assumption of the frequency of use
Each door is opened every 10 minutes, 16 hours a day, for 365 days a year, equal to n_{op}/year = 35,040

Definition of the SRP/CS and subsystems
This application example presents two safety functions:
1. Safety-related stop function initiated by a protective measure
2. Maintain interlock of the guard with motor M in motion
The safety function 1 is performed by an SRP/CS consisting of 5 subsystems (SB):
- SB11,12,13 represent the three RFID interlock devices of the NS series: SS1, SS2 and SS3
- SB14 represents the safety module CS AR-08
- SB15 represents the two contactors KM1 and KM2 in redundant architecture (cat. 4)

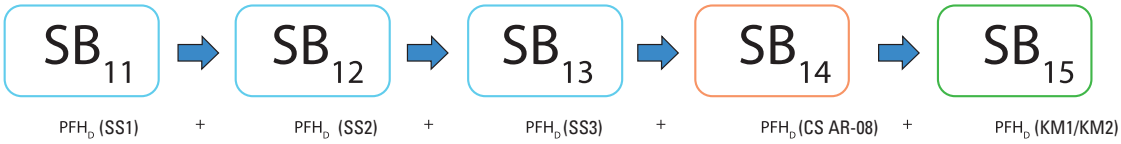

The safety function 2 is performed by 2 subsystems (SB):
- SB21 represents the CS AM11 safety module for motor standstill monitoring
- SB22 represents the three NS series RFID interlock devices

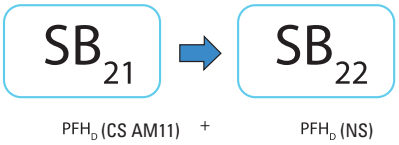

PFH_D calculation for SB15
$MTTF_D$ KM1,KM2 = 371 years.
DC = 99%, the contacts of KM1 and KM2 are monitored by the safety module via the feedback circuit.
For the CCF parameter we assume a score higher than 65 (acc. to EN ISO 13849-1 - Annex F).
A category 4 circuit with $MTTF_D$ = 371 and high diagnostic coverage (DC = 99%) corresponds to a failure probability of PFH_D = 6.3E-09 and a PL "e".

Calculation of the total PFH_D of the SRP/CS safety function 1 (interlock)
$PFH_{DTOT} = PFH_{DSB11} + PFH_{DSB12} + PFH_{DSB13} + PFH_{DSB14} + PFH_{DSB15}$ = 1E-08
It corresponds to PL "e".

Calculation of the total PFH_D of the SRP/CS safety function 2 (lock)
$PFH_{DTOT} = PFH_{DSB21} + PFH_{DSB22}$ = 1.20E-09
It corresponds to PL "e".

Calculation example performed with SISTEMA software, downloadable free of charge at www.pizzato.com

EXAMPLE 9
Application: Guard monitoring

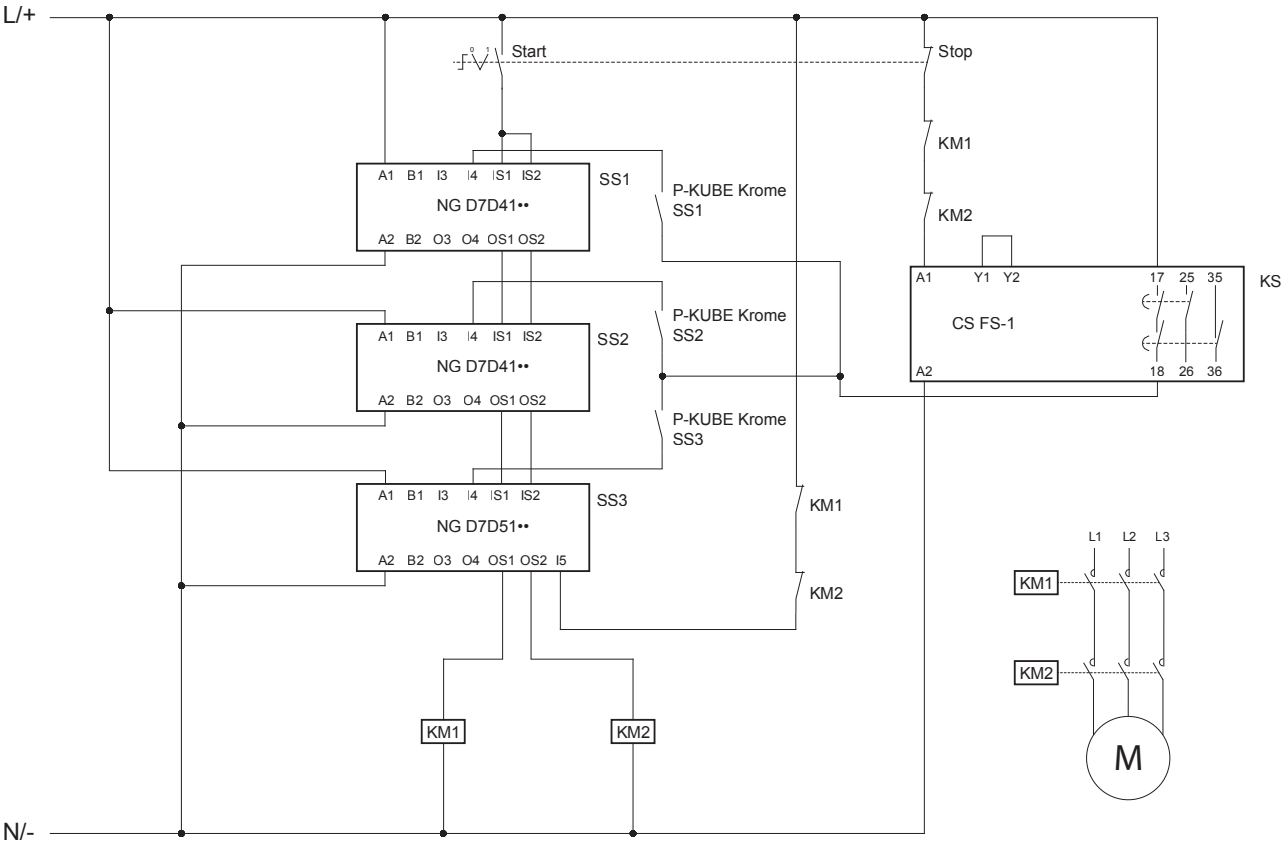

Reference standard EN ISO 13849-1	
Performance Level - Safety function 1	**PL e**
Performance Level - Safety function 2	**PL d**

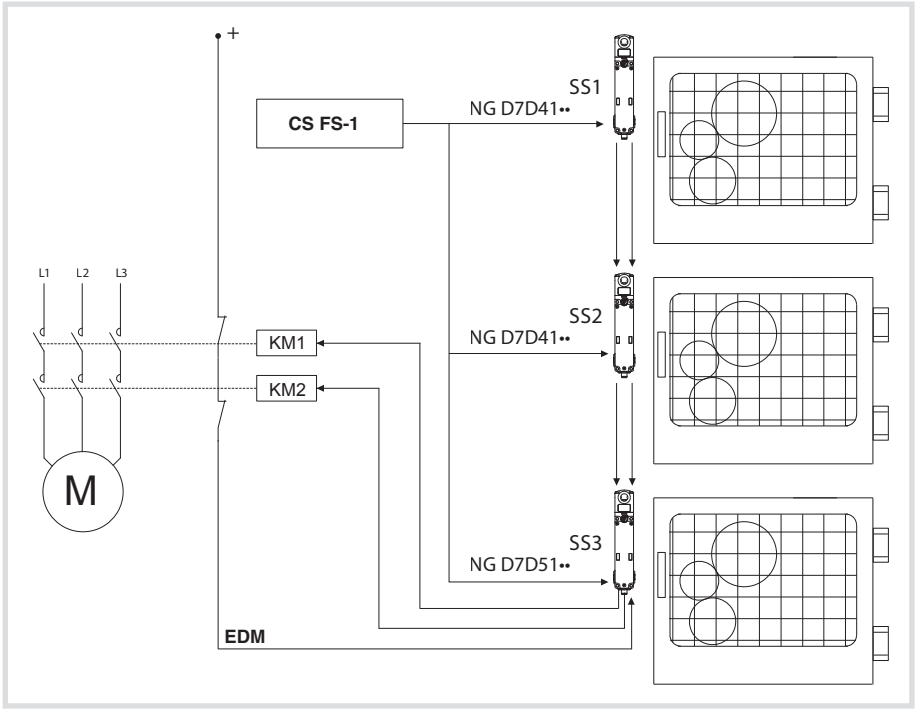

Description of the safety function
Interlocking devices SS1, SS2 and SS3 perform two safety functions: monitoring the locked state and locking the guard.
Once the guards have been released, the three sensors act directly on contactors KM1 and KM2. Contactors KM1 and KM2 (with forcibly guided contacts) are controlled by the SS3 sensor, via EDM (External Device Monitoring) input I5.
The interlock command on the three devices SS1, SS2 and SS3 depends on the closure of the safe contact of a CS FS-1 safety timer module. Each device will receive the unlock command, when the button mounted on the P-KUBE Krome handle is pressed.

Device data
SS1, SS2, SS3 are coded interlock devices with RFID technology, with guard locking device. Locked protection detection function PFH_d = 1,17E-09 PL = "e", single channel locking control function PFH_D = 1,51E-10 PL = "d".
CS FS-1 is a safety timer module, PFH_d = 5.06E-10, PL "e".
KM1 and KM2 are contactors operated at nominal load. B_{10D} = 1,300,000 (see EN ISO 13849-1 - Table C.1)

Assumption of the frequency of use
Each door is opened every 10 minutes, 16 hours a day, for 365 days a year, equal to n_{op} = 35,040

Definition of the SRP/CS and subsystems
This application example presents two safety functions:
1. Safety-related stop function initiated by a protective measure
2. Maintain interlock of the guard with motor M1 in motion
The safety function 1 is performed by an SRP/CS consisting of 4 subsystems (SB):
- SB11,12,13 represent the three RFID interlock devices of the NG series: SS1, SS2 and SS3
- SB14 represents the two contactors KM1 and KM2 in redundant architecture (cat. 4)

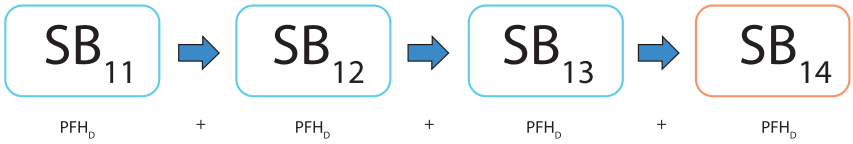

The safety function 2 is performed by 2 subsystems (SB):

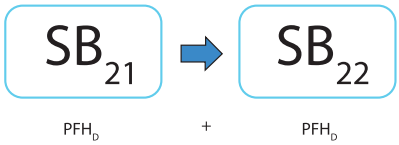

- SB21 represents the safety timer module CS FS-1
- SB22 represents the NG series RFID interlocking device

PFH_D calculation for SB14
$MTTF_D$ KM1,KM2 = 371 years.
DC = 99%, the KM1 and KM2 contacts are monitored by the last NG device in the series, via the EDM input.
For the CCF parameter we assume a score higher than 65 (acc. to EN ISO 13849-1 - Annex F).
A category 4 circuit with $MTTF_D$ = 371 and high diagnostic coverage (DC = 99%) corresponds to a failure probability of PFH_D = 6.3E-09 and a PL "e".

Calculation of the total PFH_D of the SRP/CS safety function 1
$PFH_{DTOT} = PFH_{DSB11} + PFH_{DSB12} + PFH_{DSB13} + PFH_{DSB14}$ = 9.8E-09
It corresponds to PL "e".

Calculation of the total PFH_D of the SRP/CS safety function 2
$PFH_{DTOT} = PFH_{DSB21} + PFH_{DSB22}$ = 6.6E-10
That would correspond to PL "e". Considering however, that the NG device with single channel interlock command is characterized by a PL "d", the entire SRP/CS is downgraded to this value; therefore PL "d".

Definitions according to the EN 60947-1 and EN 60947-5-1 standards

Control switches
Devices or operating mechanisms for controlling the operation of equipment, including signalling, interlocking, etc.

Utilization category
Combination of specified requirements related to the conditions in which the switching device fulfils its purpose.

Operating cycle
Sequence of two operations, one for opening and one for closing.

Rated current Ie
This current depends on the rated operating voltage, the rated frequency, the utilization category and the type of protective enclosure, if present.

Thermal current Ith
Maximum current for heating tests on equipment without enclosure, in free air. Its value shall be least to equal to the maximum value of the rated operational current Ie of the equipment without enclosure, in eight-hour duty.

Electrical endurance
Number of on-load operating cycles, under the conditions defined by the corresponding product standard, which can be carried out without repair or replacement.

Mechanical endurance
Number of no-load operating cycles (i.e. without current on the main contacts), under the conditions defined by the corresponding product standard, which can be carried out without repair or replacement of mechanical parts.

Contact elements
The parts, fixed or movable, conducting or insulating, of a control switch necessary to close and open one single conducting path of a circuit.

Single interruption contact elements
Contact element opening or closing the circuit's conducting path at one point only.

Double interruption contact elements
Contact element opening or closing the circuit's conducting path at two points in series.

Make-contact elements (normally open)
Contact element closing a circuit's conducting path when the control switch is actuated.

Break-contact elements (normally closed)
Contact element opening a circuit's conducting path when the control switch is actuated.

Change-over contact elements
Contact element combination including one make-contact element and one break-contact element.

Electrically separated contact elements
Contact elements of the same control switch which are well isolated from each other and therefore can be connected to electric circuits with different voltages.

Contact elements with independent action (snap action)
Contact element of a manual or automatic device for control circuits where the motion speed of the contact is substantially independent from the motion speed of the actuator.

Contact elements with dependent action (slow action)
Contact element of a manual or automatic device for control circuits where the motion speed of the contact depends on the motion speed of the actuator.

Minimum actuating force
Minimum force to be applied to the actuator that will cause all contacts to reach their switched position.

Position switch
Control switch whose controller is actuated by a moving part of the machine, when this part arrives to a set position.

Foot switch
Control switch whose actuator is actuated by exerting force with a foot on the pedal.

Pre-travel of the actuator
The maximum travel of the actuator which does not cause any travel of the contact elements.

Ambient temperature
The air temperature surrounding the complete switching device, under prescribed conditions.

Rated operating voltage Ue
Voltage which, combined with the rated operational current Ie, determinates the application of the equipment and the referred utilization categories.

Rated insulation voltage Ui
Reference voltage for the dielectric test voltage and the creepage distances along surfaces.

Rated impulse withstand voltage Uimp
The highest peak value of an impulse voltage, of a prescribed shape and polarity, which does not cause destructive discharge under the specified test conditions.

Contact block
Contact element or contact elements combination which can be combined with similar units, operated by a common actuating system.

Markings and quality marks

CE marking

The CE marking is a mandatory declaration made by the manufacturer of a product in order to indicate that the product satisfies all requirements foreseen by the directives (regulated by the European Community) in terms of safety and quality. Therefore, it ensures National bodies of the EU countries about the fulfilment of obligations laid down in the agreements.

IMQ mark

The IMQ (Italian Institute of the Quality Mark) is an association in Italy (independent third body) whose task is to check and certify the compliance of materials and equipment with safety standards (CEI standards in the electric and electronic sector). This voluntary conformity certification is a guarantee of quality, safety and technical value.

UL mark

UL (Underwriters Laboratories Inc.) is an independent non-profit body that tests materials, devices, products, equipment, constructions, methods and systems with regard to their risk for human life and goods according to the standard in force in the United States and Canada. Decisions made by UL are often recognized by many governing authorities concerning the compliance with local safety regulations.

CCC mark

The CQC is the organization in the Chinese Popular Republic whose task is to check and certify the low voltage electrical material. This organization issues the product mark CCC which certifies the passing of electrical/mechanical conformity tests by products and the compliance of the company quality system with required standards. To obtain the mark, the Chinese body makes preliminary company visits as well as periodical check inspections. Position switches cannot be sold in the Chinese territory without this mark.

TÜV SÜD mark

TÜV SÜD is an international authority claiming long-standing experience in the certification of operating safety for electrical, electromechanical and electronic products. In the course of type approval, TÜV SÜD closely inspects the quality throughout all the stages concerning product development, from software design and completion, to production and to the tests conducted according to ISO/IEC standards. The operating safety certification is obtained voluntarily and has a high technical value, since it not only certifies the electrical safety of the product, but also its specific operating suitability for use in safety applications according to the IEC 61508 standard.

EAC mark

The EAC certificate of conformity is a certificate issued by a Customs Union certification body formed by Russia, Belarus and Kazakhstan, with which the conformity of a product is certified with the essential safety requirements laid down by one or more Technical Regulations (Directives) of the Customs Union.

ECOLAB mark

ECOLAB is one of the world's leading providers of technologies and services for hygiene in food processing. ECOLAB certifies the compatibility of tested electrical devices in its own laboratories, using disinfectants and cleaning agents used in the area of food processing worldwide.

UKCA mark

Following the withdrawal of the United Kingdom from the European Union, the UKCA mark (UKCA Conformity Assessment) takes the place of the CE marking for the British market (England, Scotland and Wales).
The UKCA mark indicates that the product satisfies the British regulations. As in the European Union, conformity can be achieved through the application of harmonised standards, the so-called "designated standards".
The evaluation of the conformity can be performed through self-certification or through a certification process by an "approved body".

International and European Standards

EN 50041: Low voltage switchgear and controlgear for industrial use. Control switches. Position switches 42.5x80 mm. Dimensions and features.
EN 50047: Low voltage switchgear and controlgear for industrial use. Control switches. Position switches 30x55 mm. Dimensions and features.
EN ISO 14119: Safety of machinery. Interlocking devices associated with guards. Design and selection principles.
EN ISO 12100: Safety of machinery. General design principles. Risk assessment and risk reduction.
EN ISO 13849-1: Safety of machinery. Safety-related parts of control systems. Part 1: General principles for design.
EN ISO 13850: Safety of machinery. Emergency stop devices, functional aspects. Design principles.
EN 61000-6-3 (equivalent to IEC 61000-6-3): Electromagnetic compatibility. Generic emission standard. Part 1: Residential, commercial and light-industrial environments.
EN 61000-6-2 (equivalent to IEC 61000-6-2): Electromagnetic compatibility. Generic immunity standard. Part 2: Industrial environments.
EN ISO 13855: Safety of machinery. Positioning of safeguards with respect to the approach speeds of parts of the human body.
EN ISO 14118: Safety of machinery. Prevention of unexpected start-up.
EN ISO 13851: Safety of machinery. Two-hand control devices. Principles for design and choice.
EN 60947-1 (equivalent to IEC 60947-1): Low-voltage switchgear and controlgear. Part 1: General rules.
EN 60947-5-1 (equivalent to IEC 60947-5-1): Low-voltage switchgear and controlgear. Part 5: Devices for control and operation circuits. Section 1: Electromechanical control circuit devices.
EN IEC 60947-5-2: Low-voltage switchgear and controlgear. Part 5-2: Control circuit devices and switching elements - Proximity switches.
EN 60947-5-3: Low-voltage switchgear and controlgear. Part 5-3: Control circuit devices and switching elements - Requirements for proximity devices with defined behaviour under fault conditions (PDDB).
EN 60204-1 (equivalent to IEC 60204-1): Safety of machinery. Electrical equipment of machines. Part 1: General rules.
EN 60529 (equivalent to IEC 60529): Protection degree of the housings (IP codes).
ISO 20653: Road vehicles-degrees of protection (IP CODE).
EN 62326-1 (equivalent to IEC 62326-1): Printed boards. Part 1: Generic specification.
EN 60664-1 (equivalent to IEC 60664-1): Insulation coordination for equipment within low-voltage systems. Part 1: Principles, requirements and tests.
EN 61508 (equivalent to IEC 61508): Functional safety of electrical, electronic and programmable electronic systems for safety applications.
EN IEC 62061 (equivalent to IEC 62061): Safety of machinery – Functional safety of safety-related control systems.
EN 60079-0 (equivalent to IEC 60079-0): Explosive atmospheres - Part 0: Equipment - General requirements.
EN 60079-11 (equivalent to IEC 60079-11): Explosive atmospheres - Part 11: Equipment protection by intrinsic safety "i".
EN 60079-15 (equivalent to IEC 60079-15): Explosive atmospheres - Part 15: Equipment protection by type of protection "n".
EN 60079-31 (equivalent to IEC 60079-31): Explosive atmospheres - Part 31: Equipment dust ignition protection by enclosure "t".
EN IEC 63000: Technical documentation for the evaluation of electrical and electronic products in relation to the restriction of hazardous substances.
BG-GS-ET-15: Prescriptions about how to test switches with forced contact opening to be used in safety applications (German standard).
UL 508: Standards for industrial control equipment. (American standard).
CSA C22.2 No. 14: Standards for industrial control equipment. (Canadian standard).

European directives

2014/35/EU	Directive on low-voltage switchgear and controlgear
2006/42/EC	Machinery Directive
2014/30/EU	Directive on electromagnetic compatibility
2014/34/EU	ATEX Directive
2011/65/EU	RoHS Directive
2014/53/EU	Radio Equipment Directive

Regulatory Organisations

CEI	Comitato Elettrotecnico Italiano (IT)	**IEC**	International Electrotechnical Commission
CSA	Canadian Standard Association (CAN)	**VDE**	Verband Deutscher Elektrotechniker (DE)
CENELEC	European Committee for Electrotechnical Standardisation	**UNI**	Ente Nazionale Italiano di Unificazione (IT)
CEN	European Committee for Standardisation	**UL**	Underwriter's Laboratories (USA)

Protection degree of housings for electrical material according to EN 60529

The following table reports the required protection degrees according to the IEC 60529, EN 60529 standards.
The protection degrees are indicated by the abbreviation IP and 2 following digits. 2 additional letters can be reported indicating protection of persons or other features. The first digit shows the degree of protection against penetration of external solid materials. The second digit identifies instead the protection degree against liquid penetration.

1st digit	Description	Protection for the machine	Protection for persons	2nd digit	Description	Protection for the machine
0		Not protected	Not protected	**0**		Not protected
1	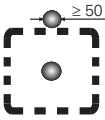	Protected against solid objects greater than 50 mm	Against access to hazardous parts with the back of a hand (Ø 50 mm)	**1**	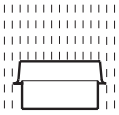	Protected against vertically falling water drops
2	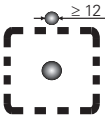	Protected against solid objects greater than 12 mm	Against access to hazardous parts with a finger (Ø 12 mm)	**2**	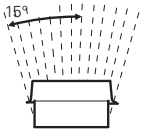	Protected against water drops falling at max. 15° angle
3	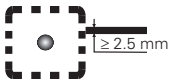	Protected against solid objects greater than 2.5 mm	Against access to hazardous parts with a tool (Ø 2.5 mm)	**3**	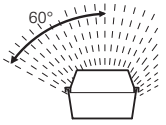	Protected against rain drops falling at max. 60° angle
4	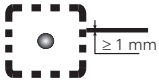	Protected against solid objects greater than 1 mm	Against access to hazardous parts with a wire (Ø 1 mm)	**4**	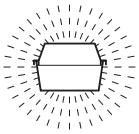	Protected against splash water from any direction
5	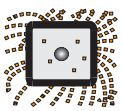	Protected against dust	Against access to hazardous parts with a wire (Ø 1 mm)	**5**	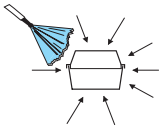	Protected against water jets from any direction
6		Totally protected against dust	Against access to hazardous parts with a wire (Ø 1 mm)	**6**	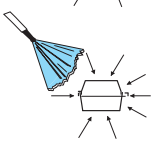	Protected against powerful water jets from any direction (e.g. waves)
				7	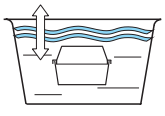	Protected against temporary water immersion (30 minutes at one-meter depth)
				8	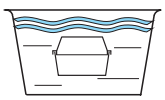	Protected against continuous immersion in water

Protection degree IP69K according to ISO 20653

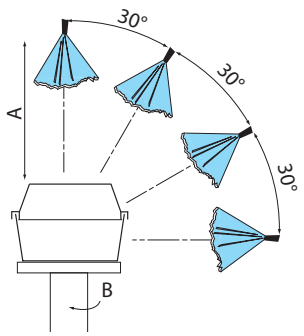

ISO 20653 envisages a particularly strenuous test. This test simulates the conditions of pressure washing in industrial environments with water jets having pressure between 80 and 100 bar, flow rate between 14 and 16 l/min. and a temperature of 80°C.

Test specifications:

Rotation speed (B):	5 ± 1 rpm
Distance from water jet (A):	100 +50/-0 mm
Water flow rate:	15 ± 1 l/min
Water pressure:	9000 ± 1000 kPa
Water temperature:	80 ± 5 °C
Test duration:	30 s per position

Housing data in accordance with UL (UL 508) and CSA (C22.2 No. 14) approvals

The features required for a housing are determined by a specific environmental designation and other features such as the kind of gasket or the use of solvent materials.

Type	Intended use and description
1	Mainly for indoor utilization, supplied with protection against contact with the internal mechanism and against a limited quantity of falling dirt.
4X	Suitable for both indoor and outdoor use, provided with protection degree against falling rain, water splashes and direct coming water from a pipe. No damage caused by ice formation on the hosing. Corrosion-resistant.
12	Indoor utilization, provided with a protection degree against dust, dirt, flying fibres, dripping water and outside condensation of non-corrosive fluids.
13	Indoor utilization, supplied with a protection degree against gauze, dust penetration, outside condensation and sprinkling of water, oil and non-corrosive fluids.

Pollution degree (of environmental conditions) according to EN 60947-1

According to the EN 60947-1 standard, the pollution degree is a conventional number based on the quantity of conducting hygroscopic dust, ionized gas or salt, and on the relative humidity and its frequency of occurrence resulting in hygroscopic absorption or condensation of moisture leading to reduction in dielectric strength and/or surface resistivity. In equipment to be used inside a housing or having an integral enclosure as part of the device, the pollution degree applies to the inner part of housing. With the purpose of evaluating the air and surface insulation distances, the following four pollution degrees are defined:

Degree	Description
1	No pollution or only dry and non-conductive pollution occurs.
2	Normally, only non-conductive pollution is present. Occasionally some temporary conductivity caused by condensation may occur.
3	Some conductive pollution is present, or some dry non-conductive pollution that becomes conductive because of condensation.
4	Pollution causes persistent conductivity, for instance due to conductive dust or rain or snow.

Where not otherwise specified by the applicable standards for the product, equipment for industrial applications are generally intended for their use in environment with pollution degree 3. Nevertheless, other degrees can be considered, depending on the micro-environment or on particular applications.

Use in alternating and direct current of auxiliary devices acc. to EN 60947-5-1

Alternating current use	
Utilization category	Intended use
AC12	Control of resistive loads and solid state loads with insulation by optocouplers.
AC13	Control of solid state loads with transformer isolation.
AC14	Control of electromagnetic loads, power ≤ 72 VA.
AC15	Control of electromagnetic loads, power ≥ 72 VA.

Direct current use	
Utilization category	Intended use
DC12	Control of resistive loads and solid state loads with insulation by optocouplers.
DC13	Control of electromagnetic loads without economy resistors in circuit.
DC14	Control of electromagnetic loads with economy resistors in circuit.

Changed article codes

Legend:

CS AR-03•••• → CS AR-08•••• The codes in grey have been replaced by the code after the arrow

Old Article	New Article
CS AM-0•••••	→ CS AM14F1•U-P•
CS AM-01•E01	→ CS AM14F1•U-P1
CS AM-01•E01-TC00	→ CS AM14F1•U-P2
CS AM-01•E01-TC00UR1	→ CS AM14F1•U-P3
CS AM-01•E01-TA00	→ CS AM14F1•U-P4
CS AM-01•E01-TA00UR1	→ CS AM14F1•U-P5
CS AM-01•E01-TD0	→ CS AM14F1•U-P6
CS AM-01•E01-TD0UR1	→ CS AM14F1•U-P7
CS AM-01•E01-UR1	→ CS AM14F1•U-P8
CS AR-03••••	→ CS AR-08••••
CS AT-0A••••	→ CS AT-00••••-TF0.5
CS AT-0B••••	→ CS AT-00••••-TF1
CS AT-0C••••	→ CS AT-00••••-TF3
CS AT-0D••••	→ CS AT-00••••-TF10
CS AT-1A••••	→ CS AT-10••••-TF0.5
CS AT-1B••••	→ CS AT-10••••-TF1
CS AT-1C••••	→ CS AT-10••••-TF3
CS AT-1D••••	→ CS AT-10••••-TF10
CS AT-2•••••	→ CS AT-3•••••
CS FS-0•••••	→ CS FS-1•••••
CS FS-0A••••	→ CS FS-00••••-TF0.5
CS FS-0B••••	→ CS FS-00••••-TF1
CS FS-0C••••	→ CS FS-00••••-TF3
CS FS-0D••••	→ CS FS-00••••-TF10
CS ME-2AVU24	→ CS ME-20VU24-TF0.5
CS ME-2BVU24	→ CS ME-20VU24-TF1
CS ME-2EVU24	→ CS ME-20VU24-TF2
CS ME-2CVU24	→ CS ME-20VU24-TF3

General terms and conditions of sale

These General Terms and Conditions of Sale exclusively govern the sale of all products sold by PIZZATO ELETTRICA SRL (VAT ID 01704080249), with registered office at Via Torino, 1 36063 Marostica (VI) - Italy

Purchase orders:
Orders must always be submitted in writing, via email or using another exchange system in digital format, subject to prior approval by Pizzato Elettrica (e.g. Metel).
Pizzato Elettrica reserves the right to reject orders received via email should they lack the appropriate details to allow correct identification of the sender and/or in the case of attachments containing viruses or which appear to be of questionable origin.
Purchase orders are finalised only once the customer has received an order confirmation from Pizzato Elettrica, which is binding for both parties.
Any clauses added to the purchase order by the customer that differ from these General Terms and Conditions of Sale shall not be considered binding.
The supply includes only what is expressly stated in the order confirmation.

Order cancellation/changes:
For standard products, following issue of order confirmation by Pizzato Elettrica, the customer may submit a request for any changes to the contents of the order confirmation within the fixed period of two (2) working days from issue of order confirmation — regardless of when this is read or acknowledged.
Requests for order changes or cancellations may be accepted or declined depending on the order's progress status.
Modifications or cancellations of special article orders will not be accepted under any circumstances.
Pursuant to article 1461 of the Italian Civil Code, in the event of changes to the financial standing of the customer, Pizzato Elettrica may suspend and/or cancel supply at any time.

Changes to products:
For the purpose of improving products, Pizzato Elettrica may change them at any time, without altering their fundamental characteristics, where this is considered necessary and/or opportune, with no obligation to notify the customer beforehand and/or without changes to orders already issued.

Prices:
The prices quoted in the current price list and in the order confirmation should be considered "Ex Works" (Incoterms 2020) and do not include VAT, custom taxes or any other charges.
Unless otherwise agreed, the prices quoted in the price list are not binding and may undergo changes without prior notice.
The price of the supply is indicated on the order confirmation/invoice and, where necessary in the case of long-term scheduled orders, may be amended solely by Pizzato Elettrica subject to written communication with two (2) months' prior notice. In such cases, the customer may decide to fully or partially cancel the order, regarding only the portion still to be processed, subject to written communication via email, no later than five (5) working days from receipt of communication from Pizzato Elettrica.

Packaging:
Packaging is free of charge. For more than six boxes, pallets may be required for transport, and these are also provided free of charge.

Payment terms:
Payments due from the customer must be made in Euro by the deadline and according to the terms and conditions indicated on the invoice.
The payment method is always at the customer's risk, regardless of the means chosen.
In the event of late payment, Pizzato Elettrica reserves the right to suspend and/or cancel orders being processed, without prejudice to the right to claim compensation for any damages incurred.
It remains understood that failure to make payment by the indicated deadline will result in the customer being automatically charged default interest pursuant to European Directive 2011/7/EU, as per the amounts set out by Italian Legislative Decree 231/2002.
Any technical or commercial complaints or use of the warranty do not entitle the claimant to suspend payments due.

Minimum billing amount:
Unless specifically agreed otherwise, the minimum billing amount is EUR 200 net (VAT excluded) of product, excluding any additional charges.
For invoices of less than EUR 200, a fee of EUR 20 will be charged if delivery is within the EU, or EUR 40 if delivery is outside the EU.
Invoices are issued weekly.

Order quantities:
Some products are shipped in packs. The ordered quantities of these items must be multiples of the quantities contained in the packages.

Delivery:
The delivery period indicated in the order confirmation refers to the time when the goods are expected to be available at Pizzato Elettrica sites for pick-up, and not the date of arrival at the customer's location.
Delivery dates should always be considered approximate and not binding: failure to meet delivery dates does not represent a breach by Pizzato and, consequently, does not give rise to any right to compensation or reimbursement, nor any other right of the Purchaser, who remains bound by the terms and conditions set out in the order confirmation (e.g. payment terms).
Specifically, the customer acknowledges that the terms of delivery of goods may be subject to legitimate delays (including but not limited to difficulties in sourcing raw materials), which shall not give rise to any right to compensation and/or reimbursement.
A list of items normally kept in stock can be found at www.pizzato.com

Shipment:
Pizzato Elettrica ships goods "Ex Works" (Incoterms® 2020 published by the ICC).
At the customer's request, Pizzato Elettrica may ship goods "Delivered at Place" (DAP - Incoterms® 2020 published by ICC) with transport costs charged on the invoiced to the customer by Pizzato Elettrica.
On arrival of the goods, the customer shall verify that the courier delivers all packages indicated in the transport document or accompanying invoice, ensuring they are complete and of the correct weight. In case of any inconsistencies against the transport document/accompanying invoice, and/or visible damage to the packaging, the customer must always accept the goods SUBJECT TO INSPECTION, clearly specifying the reason.
Any damage to packaging, missing packages or errors must be promptly reported to the courier, notifying Pizzato Elettrica in writing within two (2) working days from the date of receipt of the goods at info@pizzato.com. Otherwise, the goods will be considered to have been delivered in perfect condition.

General terms and conditions of sale

Complaints:
Should the customer identify a defect in the goods or a non-conformity in relation to the order submitted, Pizzato Elettrica should be notified within eight (8) days of delivery or identification of the issue, where it is not immediately evident.
Under no circumstances will claims be accepted beyond the strict warranty deadline specified in the following section.

Warranty:
The warranty has a validity of 12 months starting from the shipping date of the material.
Pizzato Elettrica reserves the right, at its unchallengeable discretion, to evaluate the existence of any defect and/or non-conformity in the goods.
The warranty does not cover products damaged due to improper use, negligence, or incorrect installation/assembly.
The warranty does not cover parts subjected to wear or products used beyond the product's technological limits described in the catalogue, or items that have not been properly maintained.
Pizzato Elettrica undertakes to repair or replace, in whole or in part, products proven to have manufacturing defects, provided that such defects are reported within the guarantee period and no later than 8 (eight) days from their discovery, in accordance with the indications set out under "Complaints".
Pizzato Elettrica is only responsible for the value of the product and requests for compensation due to machine downtime, repairs or costs for direct or indirect damages resulting from product malfunctions will not be accepted, even if these occur during the warranty period.
Any samples provided free of charge or bearing the phrase "SAMPLE" must be considered as purely demonstrative and are not covered by the guarantee.
The warranty will be subject to the customer's compliance with the payment terms.
The customer remains solely responsible for evaluating the technical characteristics of Pizzato Elettrica products and, consequently, their suitability in relation to the customer's intended use. Pizzato Elettrica cannot be held in any way responsible for the consequences arising from improper use of products, including in the case of risks to the health and safety of personnel (redundancy systems, self-controlled systems, etc.).

Returns:
Any returns, for any reason, will not be accepted unless they have been previously APPROVED and AUTHORISED in writing by Pizzato Elettrica.
Otherwise, Pizzato Elettrica reserves the right to reject the goods and return them "freight collect", using the same carrier by which they were originally shipped, with all costs charged to the customer.
Authorised returns have to be sent back no later than three (3) months from the date of authorisation. After this period, returns will not be accepted.
A return request is associated with a reduction in the sale price and will be considered only for standard articles and materials shipped within the last twelve (12) months. Custom/personalised materials are not eligible for return under any circumstances.
The returned goods and the relative packaging must be returned intact and undamaged.
The customer shall bear the packaging and delivery costs associated with the return.

Transfer:
Orders cannot be transferred to third parties by the customer, unless such transfer has been previously agreed upon and authorised in writing by Pizzato Elettrica S.r.l.

Retention of title:
Where payment of goods is made after shipping and/or delivery, pursuant to Article 1523 of the Italian Civil Code, the shipped goods shall remain the property of Pizzato Elettrica until all payments due have been fully settled.
Until this time, the customer undertakes to safeguard the goods and maintain their condition for the intended use, without transferring them, selling them, or otherwise making them available to third parties.
Should the customer sell the goods to third parties prior to payment to Pizzato Elettrica, and therefore before the effective transfer of ownership, Pizzato Elettrica's retention of title persists in relation to such third parties, where permitted by law.
In the event of failure to pay or partial payment by the customer, Pizzato Elettrica shall have the right to request the return of the goods, without prejudice to its right to seek compensation for any additional damages.

Force Majeure:
Pizzato Elettrica cannot be held responsible for any delay in the fulfilment of obligations arising from these General Terms and Conditions of Sale, where such delay is caused by unforeseeable events beyond the control of Pizzato Elettrica, including but not limited to natural disasters, epidemics, rioting, strikes, at local or national level, fires or the unavailability of raw materials.
In case of a force majeure event, Pizzato Elettrica will attempt to adopt solutions that limit the consequences of the force majeure event and/or their continuation.

Privacy:
Pizzato Elettrica declares, pursuant to the GDPR (EU Regulation 2016/679) and applicable Italian legislation, that it processes the ordinary personal data of customers in compliance with the aforementioned legislation and, in any case, only to the extent and for the purposes strictly necessary for the execution of the contract.

Final clauses:
Any amendment or addition necessary to these General Terms and Conditions of Sale must be agreed between the parties in writing, otherwise being null and void.
In the event that any of the provisions is or becomes ineffective or impossible to implement or in the event that these General Terms and Conditions of Sale are found to be incomplete, the remaining provisions of these terms and conditions shall remain valid and applicable.
Any failure to exercise, including on multiple occasions, by either of the parties, a right deriving from these General Terms and Conditions of Sale shall not represent a waiver of such right nor of any other rights established herein.

Applicable law:
For all aspects not expressly indicated herein, Italian law shall apply.

Dispute resolution:
Any dispute regarding these General Terms and Conditions of Sale or the sale/purchase relationship with the customer shall fall under the exclusive jurisdiction of the Court of Vicenza.

For the updated terms of sale, please consult the website www.pizzato.it

Notes

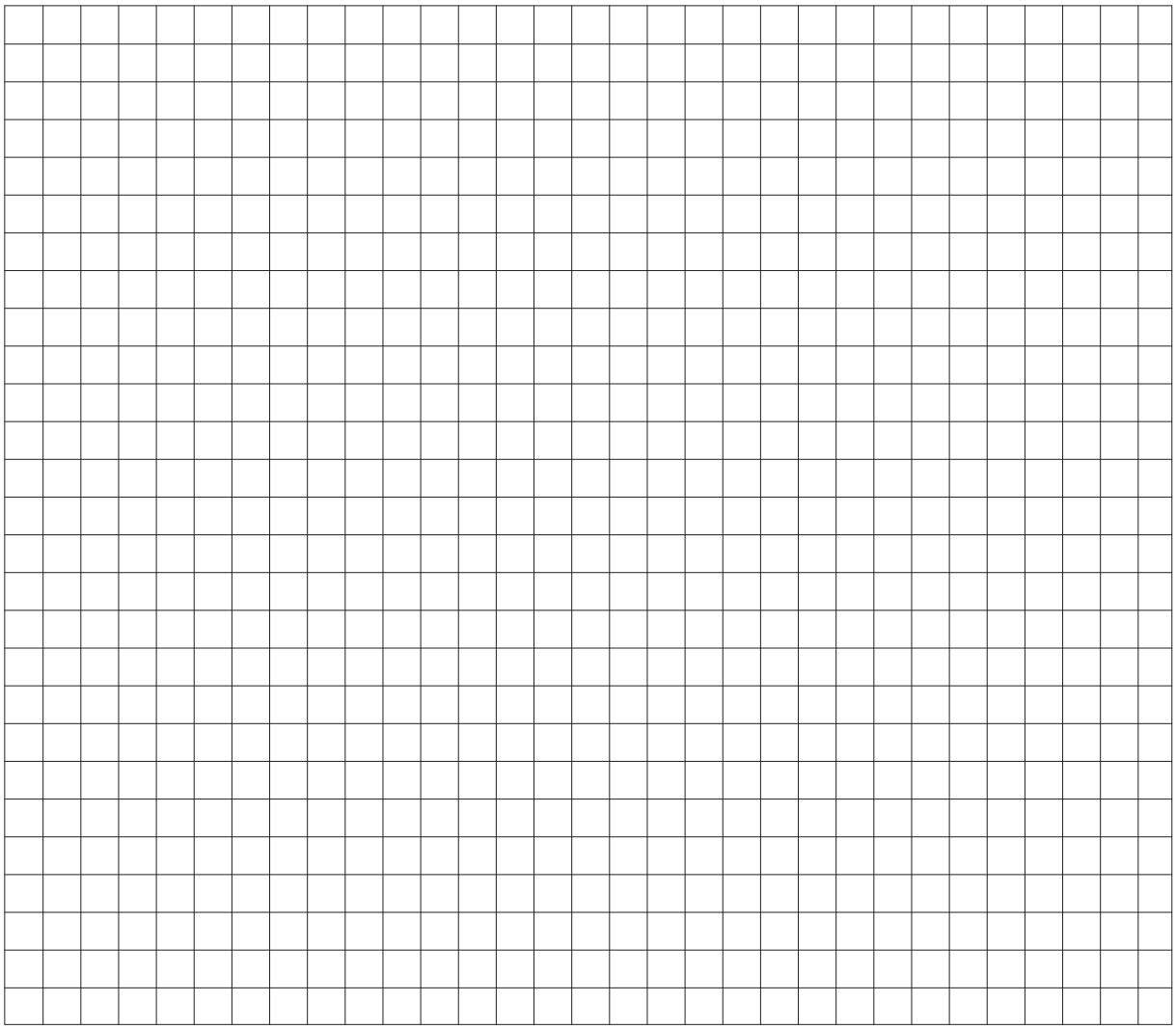

Notes

Notes

Notes

Notes

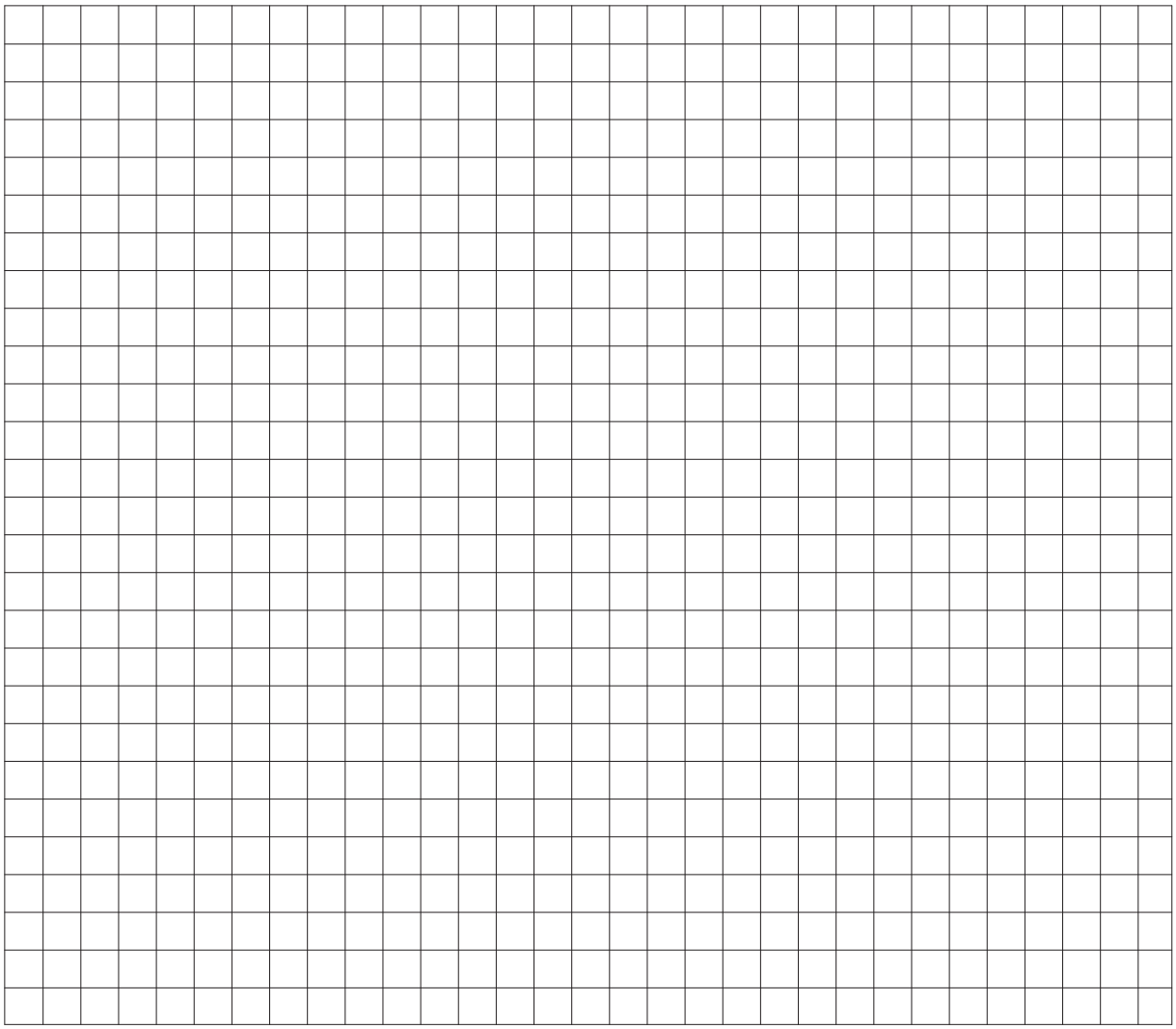

Notes

General Catalogue
Detection

General Catalogue
HMI

General Catalogue
Safety Devices

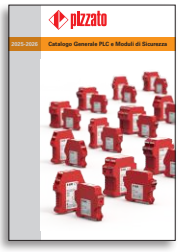

General Catalogue
- PLCs & Safety
Modules

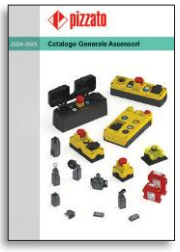

General Catalogue
Lift

Website
www.pizzato.com

PASSION FOR QUALITY

Pizzato Elettrica s.r.l. via Torino, 1 - 36063 Marostica (VI) Italy
Phone: +39 0424 470 930
E-mail: info@pizzato.com
Website: www.pizzato.com

Any information or application example, connection diagrams included, described in this document are to be intended as purely descriptive. The choice and application of the products in conformity with the standards, in order to avoid damage to persons or goods, is the user's responsibility. The drawings and data contained in this document are not binding and we reserve the right, in order to improve the quality of our products, to modify them at any time without prior notice. All rights to the contents of this publication are reserved in accordance with current legislation on the protection of intellectual property. The reproduction, publication, distribution and modification, total or partial, of all or part of the original material contained therein (including, but not limited to, texts, images, graphics), whether on paper or in electronic form, are expressly prohibited without written permission from Pizzato Elettrica Srl. All rights reserved. © 2024 Copyright Pizzato Elettrica.

ZE GCM06B24-ENG

8 018851 689642